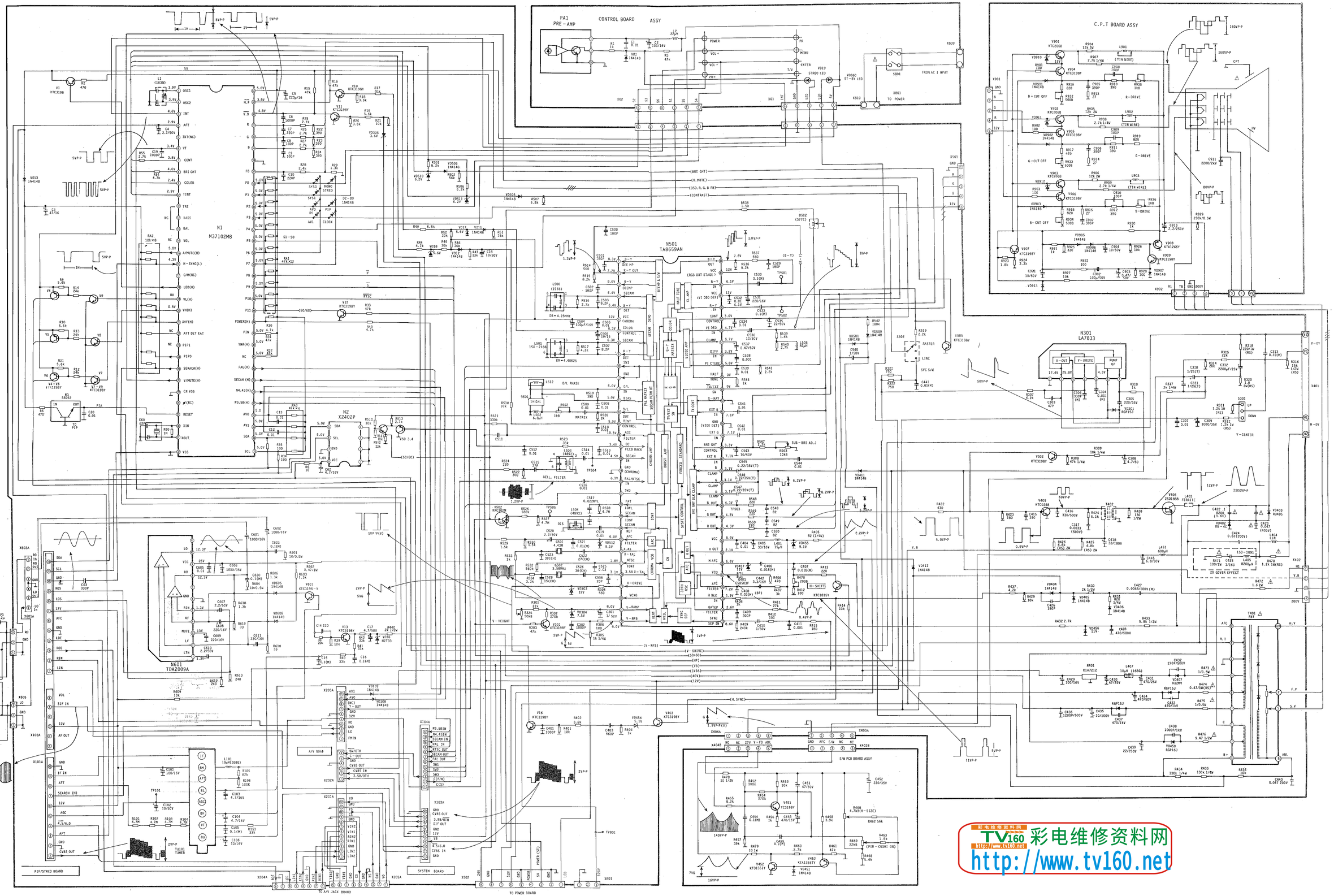
PA1
PRE-AMP
CONTROL BOARD
ASSY
C.P.T BOARD ASSY
N1
M37102M8
N501
TA8659AN
N301
LA7833
N2
XZ402P
N601
TDA2009A
E/W PCB BOARD ASSY
A/V BOAR
SYSTEN BOARD
PIF/STREO BOARD
TO A/V JACK BOARD
TO POWER BOARD
FROM AC 1 INPUT
TO POWER
POWER
MENU
ENTER
STREO LED
ST-BY LED
PRIMARY DET
DEMP
SECAM
DET
CHROMA
COLOR
CONTROL
SECAM
DEF
SW1
SW2
D/L
BIAS
OUT
TINT
CONTROL
AGC
FILTER
DC
FEED BACK
SECAM
IN
GND
(CHROMA)
PAL/NTSC
IN
SW3
PAT
IDNL
SECAM
IDNT
SECAM
REF
APC
FILTER
X-TAL
NTSC
IDNT
3.58 X-TAL
V-DRIVE
VCXO
V-RAMP
V-MFB
OUT
VCC
(RGB OUT STAGE)
IN
VCC
(VI DEO DET)
IN
CONT
CONTROL
VI DEO
CLAMP
DIFF
IN
PI CTURE
HALF
TONE
SW
X-RAY
EXT B
IN
GND
(VIDEO DET)
EXT G
IN
BRI GHT
CONTROL
EXT R
IN
CLAMP
B
CLAMP
G
CLAMP
B OUT
G OUT
R OUT
VCC
H OUT
H AFC
VCO
AFC
FILTER
H BLK
IN
GATEP
FILTER
SYNC
SEP IN
(B-Y)
(R-Y)
(V-DRIVE)
(50/60)
(HP)
(VB)
(CVBS)
(4CV)
(12V)
(H.SYNC)
(V-NFB)
(SRI GHT)
(V.MUTE)
(OSD.R.G.B FB)
(CONTRAST)
(50/60)
V-HEIGHT
V-CENTER
SUB-BRI AD.J
BELL FILTER
D/L PHASE
MATRIX
DS=4.25MHz
DS=4.40625
PIF
PIP
CLOCK
MONO
STREO
RASTER
LINE
SYC S/W
PUMP UP
DOWN
UP
H-DY
V-DY
20 GOVER EFFECT
B-CUT OFF
G-CUT OFF
R-DRIVE
G-DRIVE
B-DRIVE
(TIN WIRE)
CPT
TUNER
TU101
400WVP-P
140VP-P
16VP-P
7VG
11VP-P
110CVP-P
160VP-P
80VP-P
50VP-P
200V
ABL
H.V
F.V
S.V
V.B
X401
X402
X501
X502
X601
X602
X603
X605
X701
X801
X901
X902
X903
X904
X905
X906
X907
X908
X909
X910
X911
X912
X913
X914
X915
X916
X917
X918
X919
X920
X921
X922
X923
X924
X925
X926
X927
X928
X929
X930
X931
X932
X933
X934
X935
X936
X937
X938
X939
X940

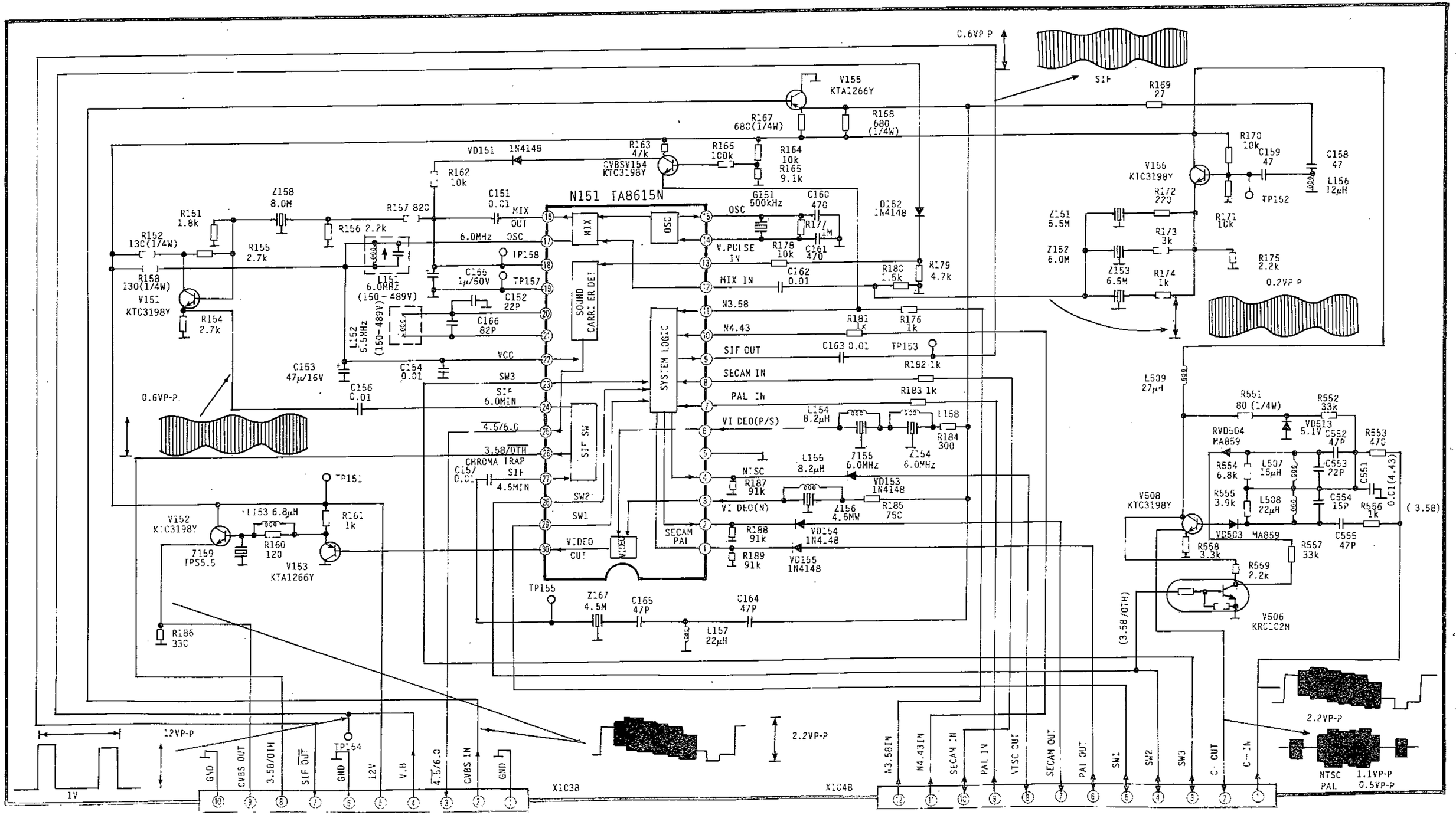
N151 TA8615N
MIX
OSC
SOUND CARRIER DET
SYSTEM LOGIC
SIF SW
VCO
MIX OUT
6.0MHz OSC
V.PULSE IN
MIX IN
N3.58
N4.43
SIF OUT
SECAM IN
PAL IN
VI DEO(P/S)
NTSC
VI DEO(N)
SECAM PAL
VCC
SW3
SIF 6.0MIN
4.5/6.0
3.58/OTH
CHROMA TRAP
SIF 4.5MIN
SW2
SW1
VIDEO OUT
V155 KTA1266Y
V156 KTC3198Y
V151 KTC3198Y
V152 KTC3198Y
V153 KTA1266Y
V508 KTC3198Y
V506 KRC102M
GND
CVBS OUT
3.58/OTH
SIF OUT
12V
V.B
4.5/6.0
CVBS IN
X1C38
X1C4B
N3.58IN
N4.43IN
SECAM IN
PAL IN
NTSC OUT
SECAM OUT
PAL OUT
SW2
SW3
C OUT
C-IN
NTSC
PAL
1.1VP-P
0.5VP-P
2.2VP-P
12VP-P
0.6VP-P
0.2VP-P
SIF
(3.58)
(3.58/OTH)

金星 C6418、C6438、C6458、C6468、C7411、C7458

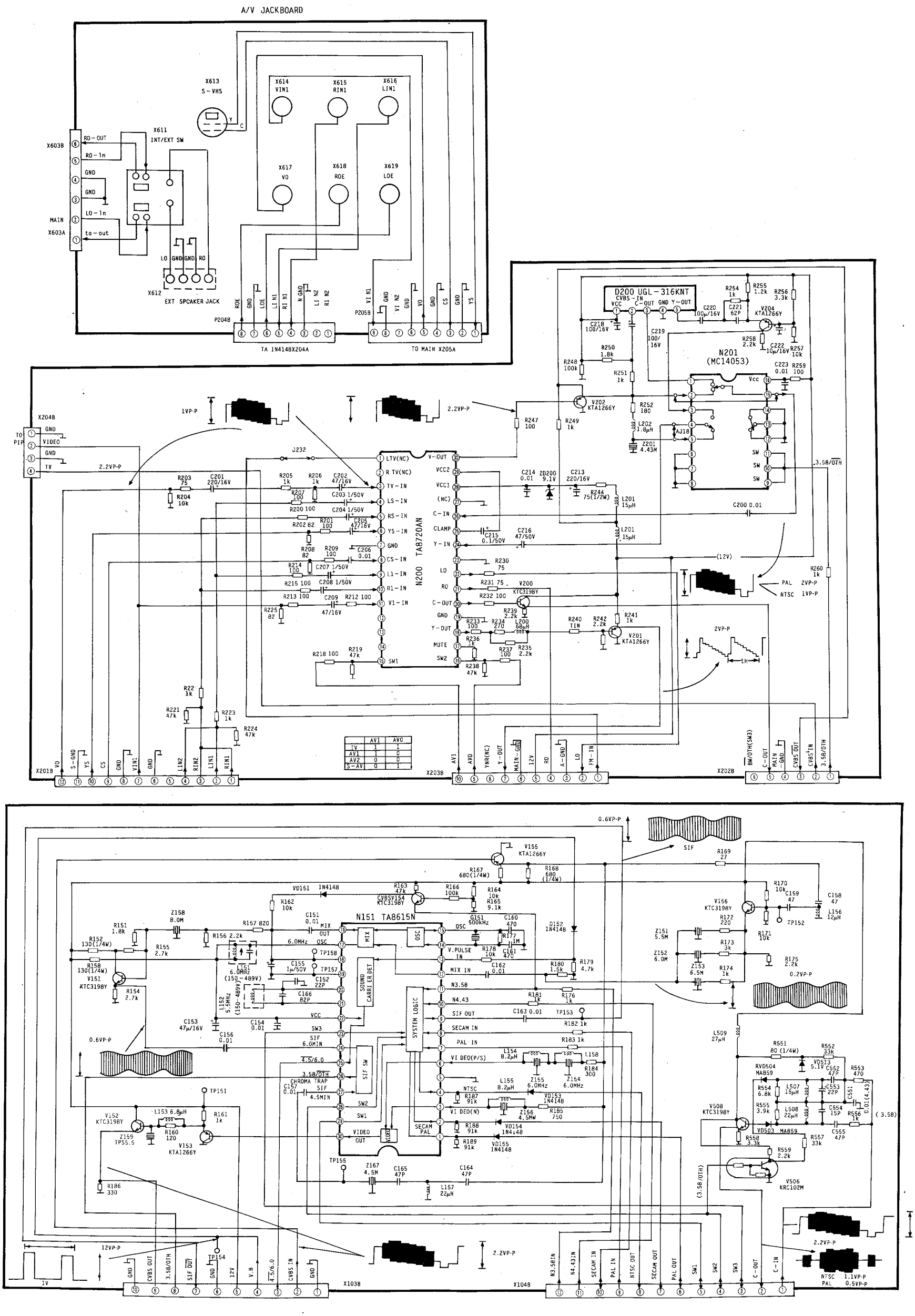

POWER (M/S) SMPS

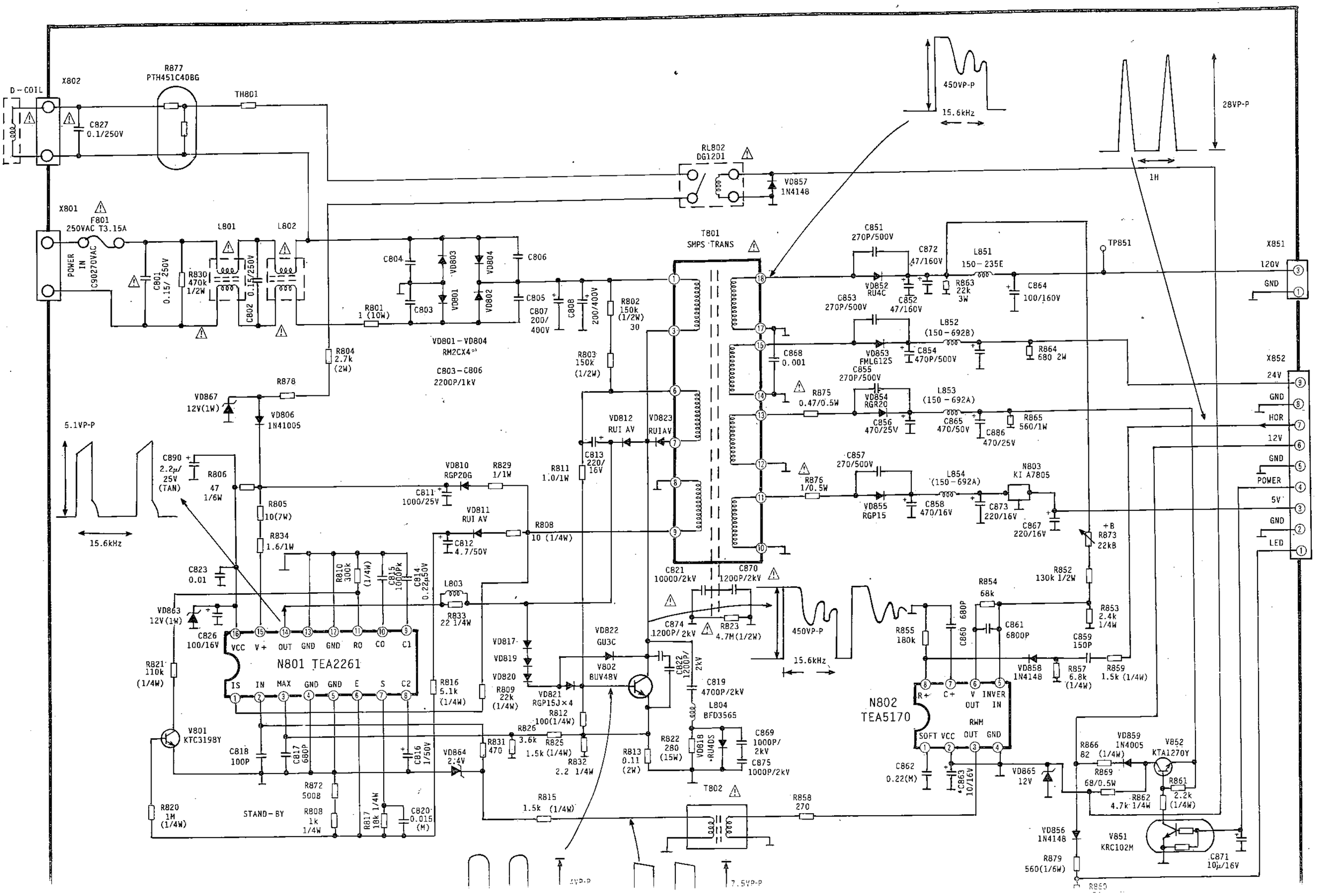
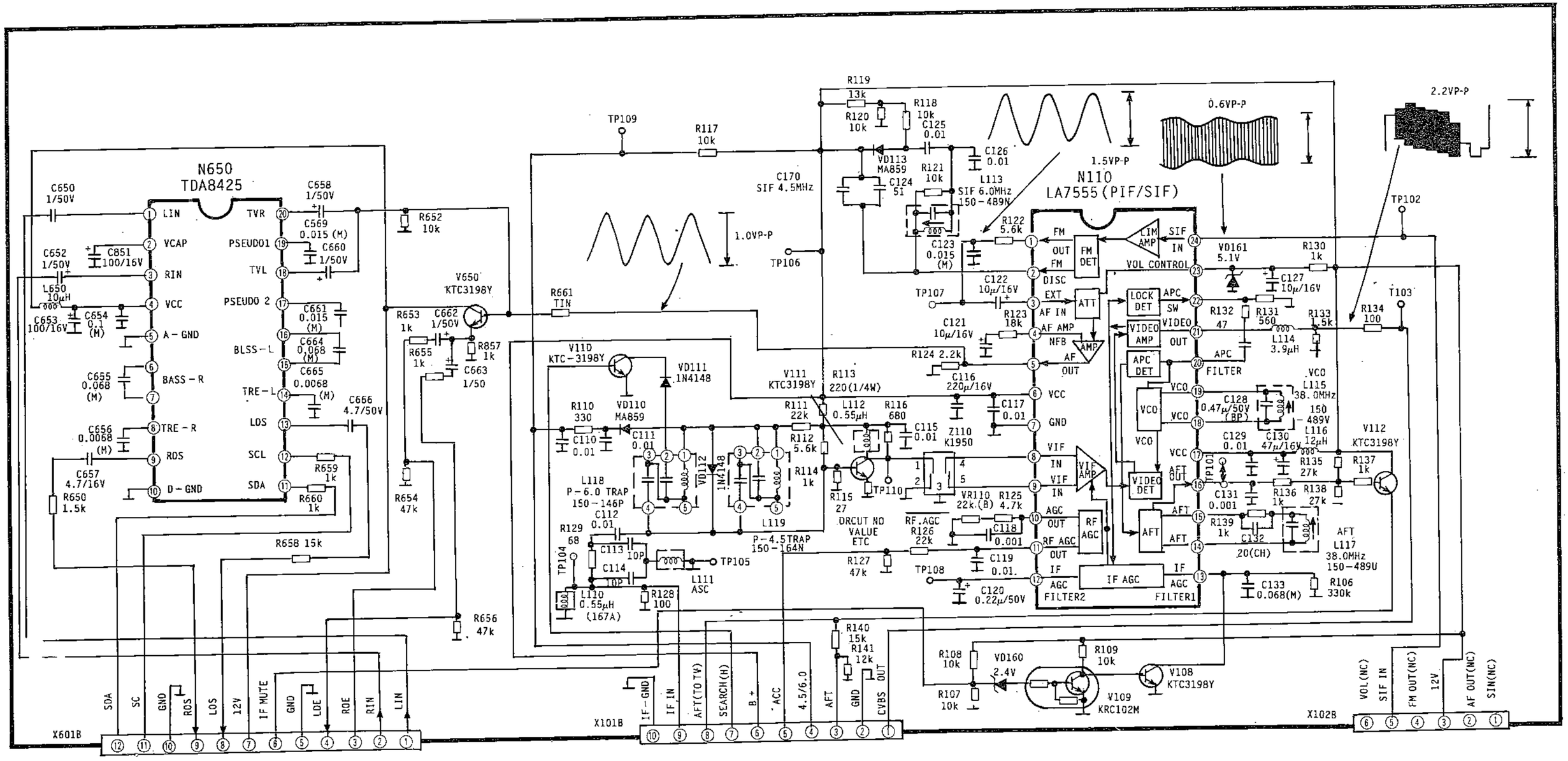
PIF/SIF/STEREO BOARD1
(MULT1 PSEUDO + AVSTEREO)