PRODUCT SAFETY NOTE : Components marked with a ⚠ have special caracteristics important to safety. Before reflacing any of these components, read carefully the PRODUCT SAFETY NOTICE of this Service Manual. Don't degrade the safety of the receiver through improper servicing.

CMT 2198 BASIC CIRCUIT DIAGRAM

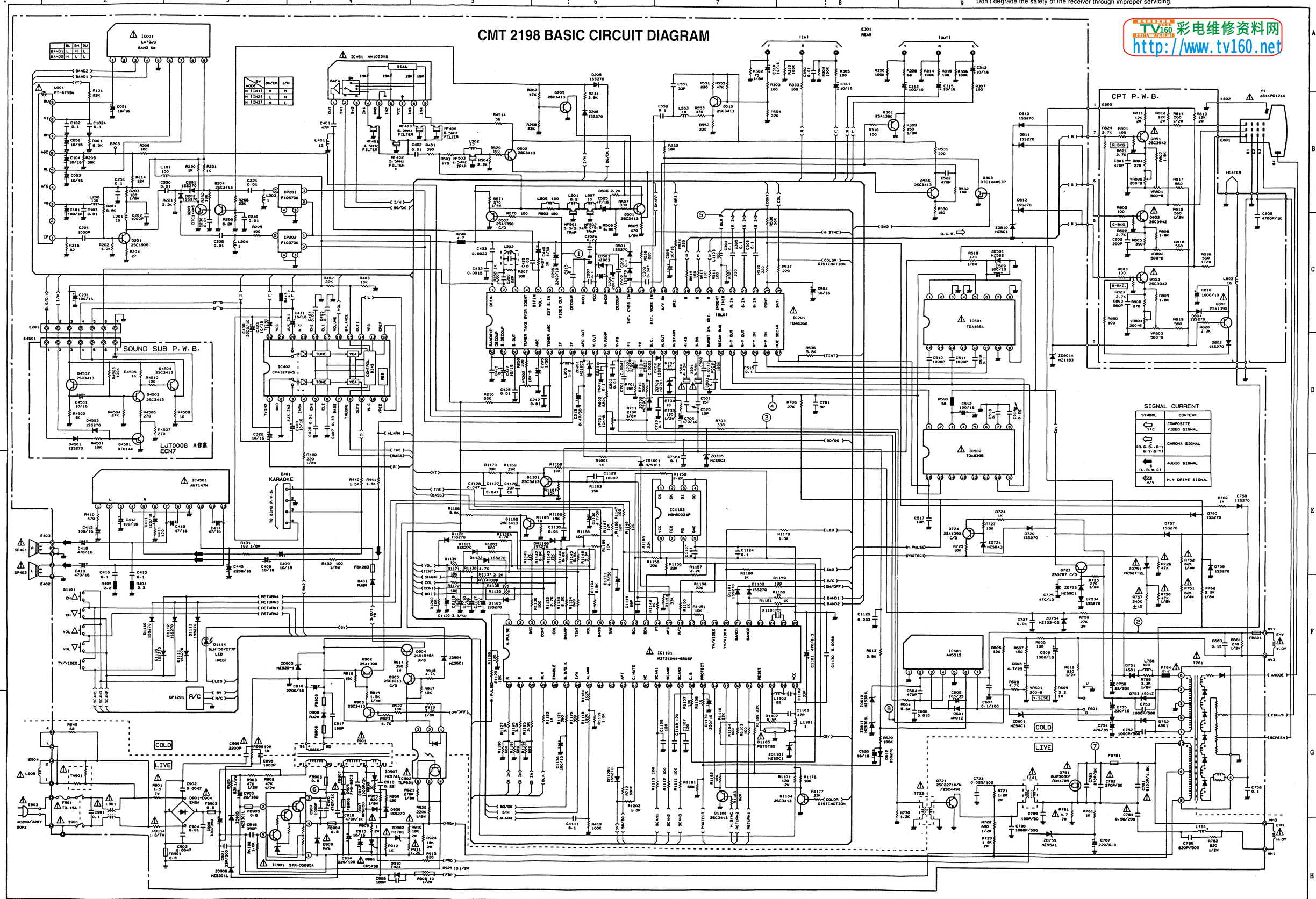

TV160 彩电维修资料网 http://www.tv160.net

ABCDEFGHJKLMNPQRSTUVWXYZ abcdefghijkmnpqrstuvwxyz αβγδεζηθλμξπφ

• Since this is a basic circuit diagram, the value of the parts is subject to be altered for improvement.