彩电维修资料网 TV160 http://www.tv160.net
http://www.tv160.net

Schematic Diagram of MC-019A

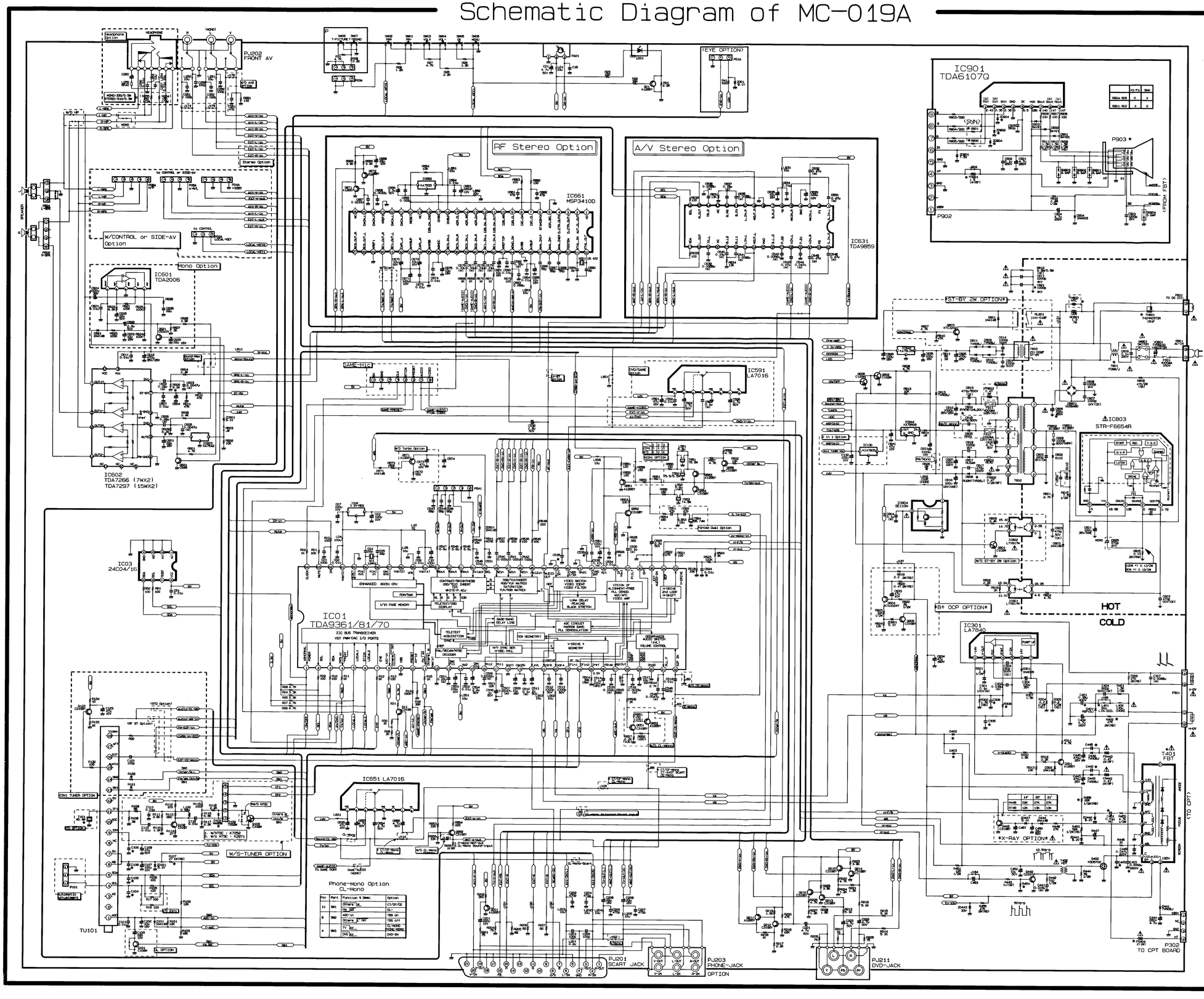

NOTICE

Since this is basic circuit diagram, the value of components and some partial connection are subject to be changed for improvement without notice.

The components marked ⚠ conform to VDE or IEC guide-lines and are essential for safe operation of the TV receiver.
While those marked ⚠ are required for correct operation.
Use specified parts only when replacing.

Value of resistor, capacitor and inductor

1. Resistances are shown in ohm. K=1,000. M=1,000,000.
2. Unless otherwise noted in schematic, all capacitor values less than 1 are expressed in mfd and the values more than 1 in pF.
3. Unless otherwise noted in schematic, all inductor values more than 1 are expressed in uH and the values less than 1 in Henry(H).

Observation of voltages and waveforms

1. Voltages read with VTVM from point to chassis ground.
   line voltage is 230V/-20% voltage signal pattern is colour-bar.
2. The schematic shown is representative only.
3. All waveforms are taken using a wide band oscilloscope and a low capacity probe.
4. Check FINE TUNING, ABC, CONTRAST, BRIGHTNESS and COLOUR controls for best picture. make sure that COLOUR and BRIGHTNESS are in mid-point and CONTRAST is in 75%.
5. Waveforms are taken using a standard colour signal.

<SYSTEM OPTION>

1 RF STEREO

2 AV STEREO

COMPONENT	CL	CE	CT	CF	REMARKS

3 MONO

COMPONENT	CL	CE	CT	CF	REMARKS

P/NO:3854VA0083A-S
2001.04.20