彩电维修资料网
TV160
http://www.tv160.net
彩电维修资料网
http://www.tv160.net

电路原理图

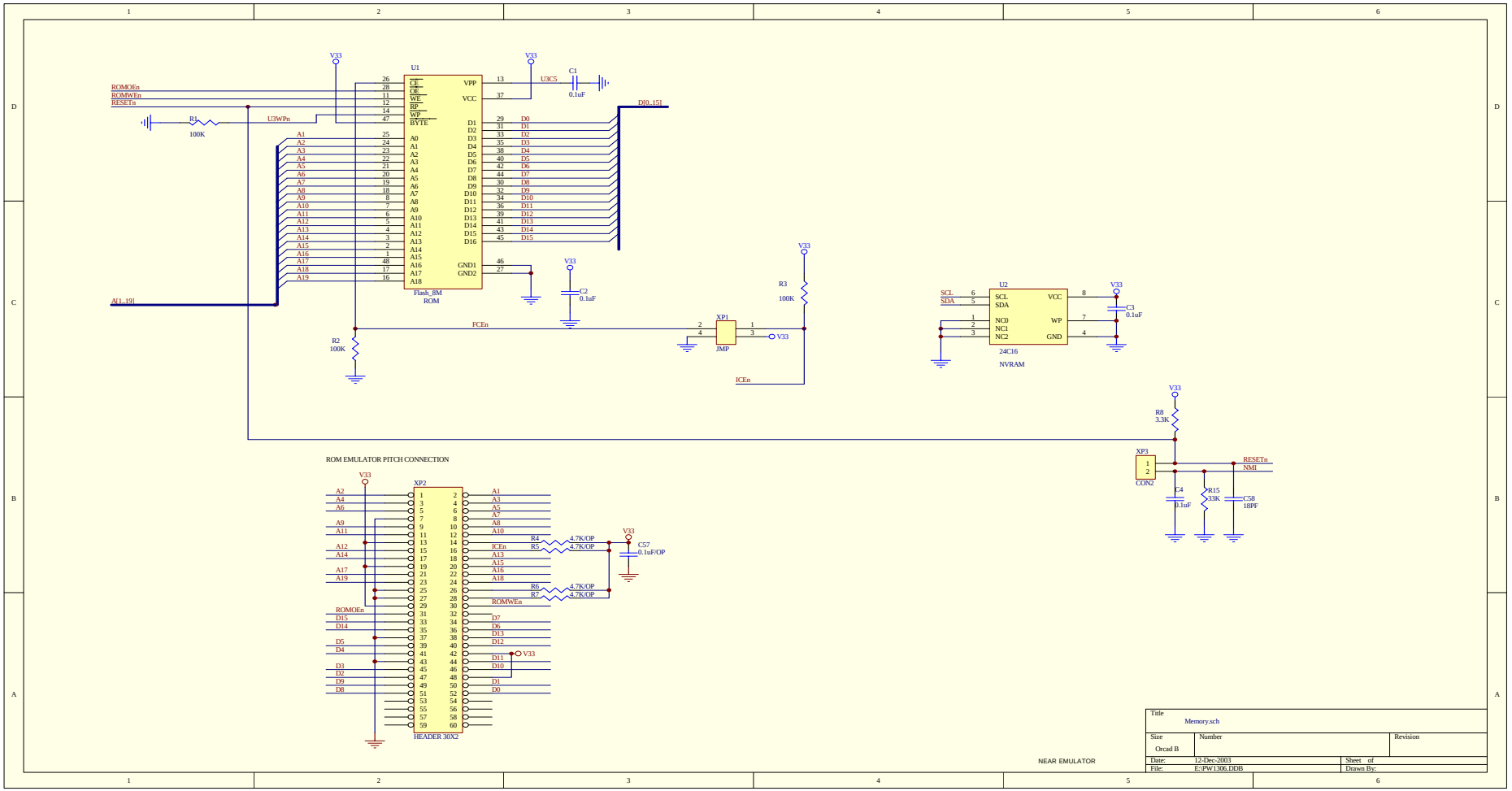

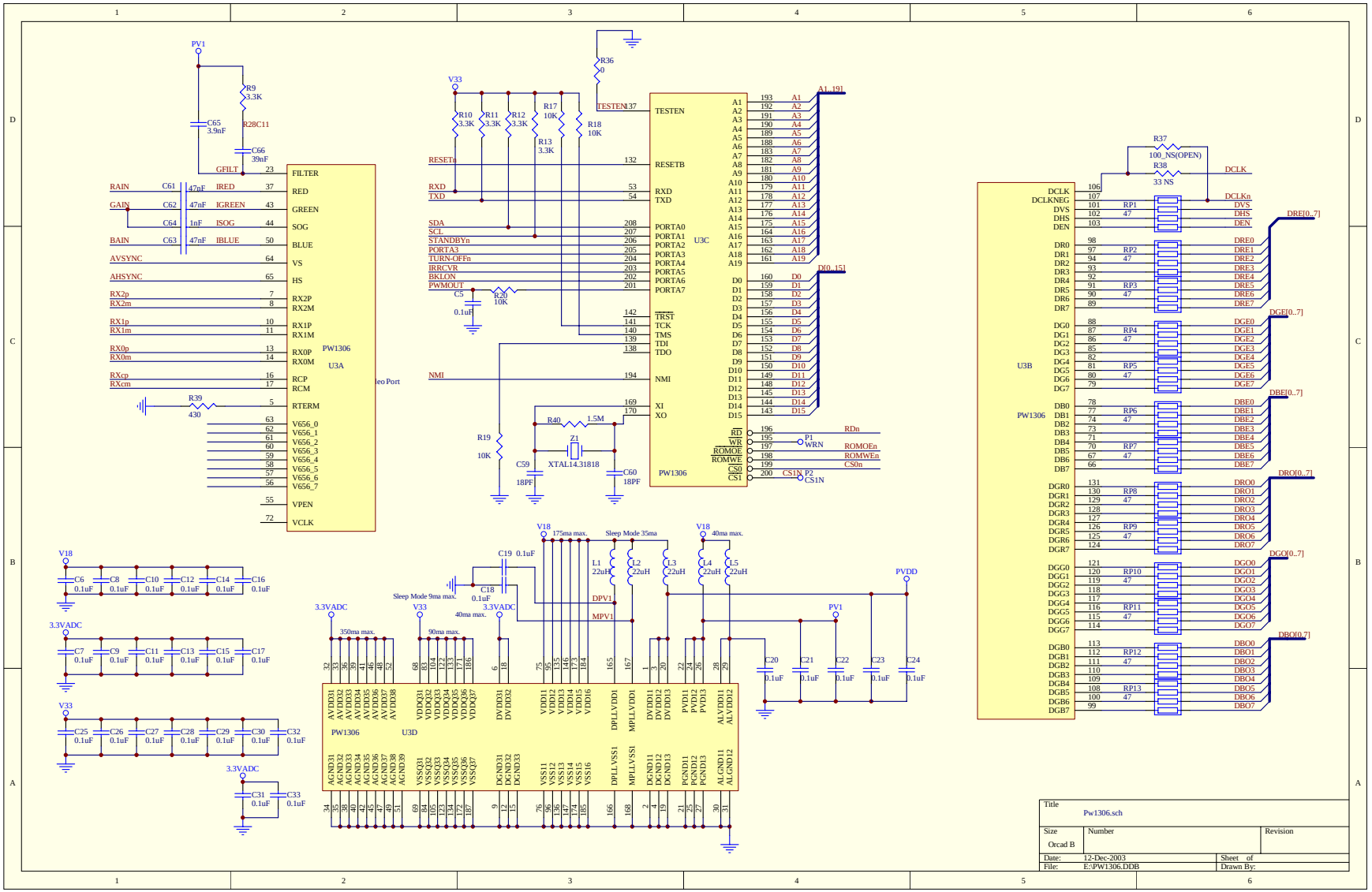
PW1306
U3A
U3C
U3B
U3D
FILTER
RED
GREEN
SOG
BLUE
VS
HS
RX2P
RX2M
RX1P
RX1M
RX0P
RX0M
RCP
RCM
RTERM
VPEN
VCLK
TESTEN
RESETB
RXD
TXD
PORTA0
PORTA1
PORTA2
PORTA3
PORTA4
PORTA5
PORTA6
PORTA7
TRST
TCK
TMS
TDI
TDO
NMI
XI
XO
RD
WR
ROMOE
ROMWE
CS0
CS1
DCLK
DCLKNEG
DVS
DHS
DEN
DR0
DR1
DR2
DR3
DR4
DR5
DR6
DR7
DG0
DG1
DG2
DG3
DG4
DG5
DG6
DG7
DB0
DB1
DB2
DB3
DB4
DB5
DB6
DB7
DGR0
DGR1
DGR2
DGR3
DGR4
DGR5
DGR6
DGR7
DGG0
DGG1
DGG2
DGG3
DGG4
DGG5
DGG6
DGG7
DGB0
DGB1
DGB2
DGB3
DGB4
DGB5
DGB6
DGB7
AVDD31
AVDD32
AVDD33
AVDD34
AVDD35
AVDD36
AVDD37
AVDD38
VDDQ31
VDDQ32
VDDQ33
VDDQ34
VDDQ35
VDDQ36
VDDQ37
DVDD31
DVDD32
VDD11
VDD12
VDD13
VDD14
VDD15
VDD16
DPLLVDD1
MPLLVDD1
DVDD11
DVDD12
DVDD13
PVD11
PVD12
PVD13
ALVDD11
ALVDD12
AGND31
AGND32
AGND33
AGND34
AGND35
AGND36
AGND37
AGND38
AGND39
VSSQ31
VSSQ32
VSSQ33
VSSQ34
VSSQ35
VSSQ36
VSSQ37
DGND31
DGND32
DGND33
VSS11
VSS12
VSS13
VSS14
VSS15
VSS16
DPLLVSS1
MPLLVSS1
DGND11
DGND12
DGND13
PGND11
PGND12
PGND13
ALGND11
ALGND12
3.3VADC
V18
V33
PVDD
DPV1
MPV1
PV1
Sleep Mode 9ma max.
Sleep Mode 35ma
175ma max.
40ma max.
350ma max.
90ma max.
XTAL14.31818
Title
Pw1306.sch
Size
Orcad B
Number
Revision
Date: 12-Dec-2003
File: E:\PW1306.DDB
Sheet of
Drawn By:

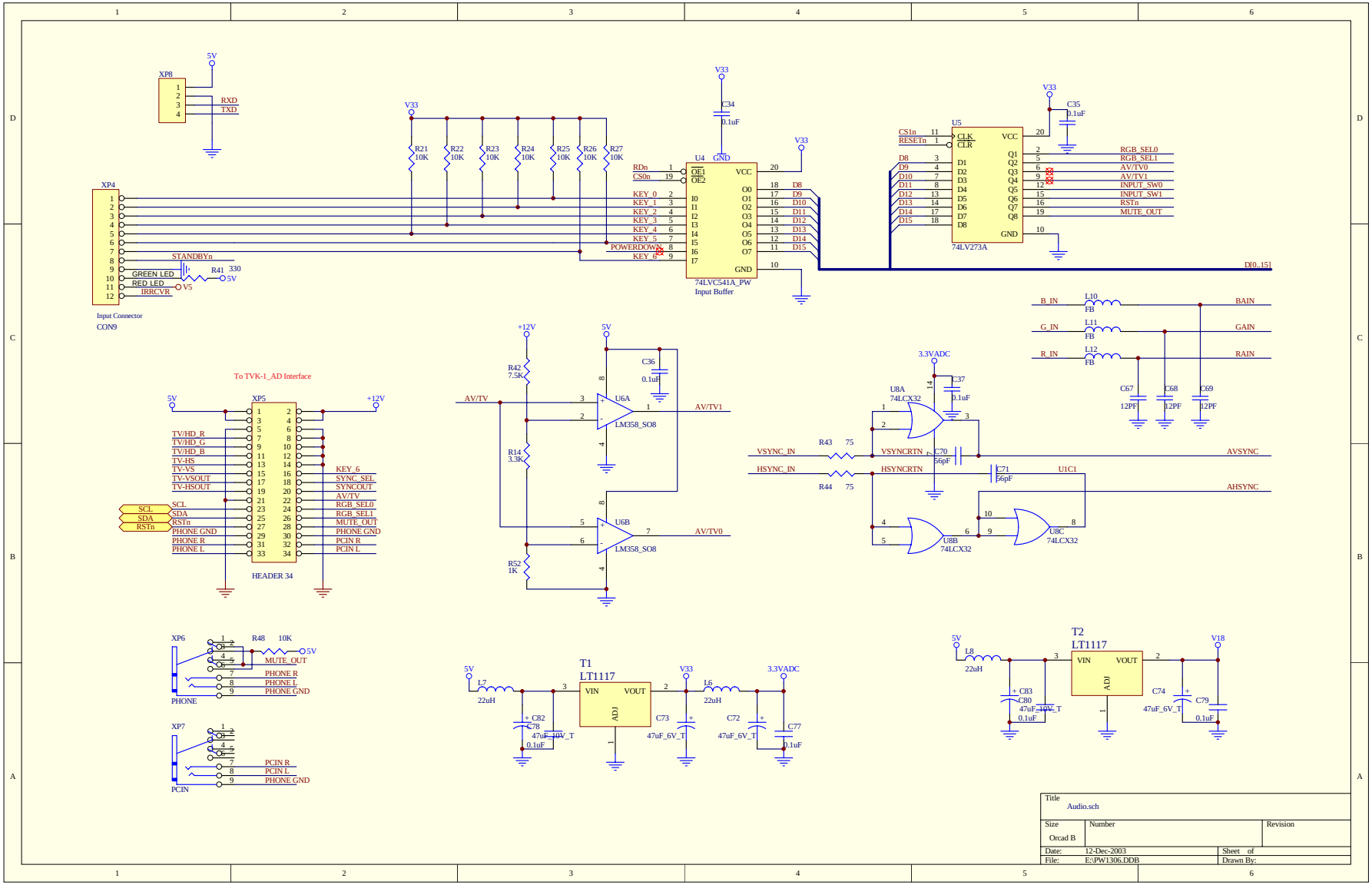

Title	Audio.sch	
Size: Orcad B	Number	Revision
Date: 12-Dec-2003		Sheet of
File: E:\PW1306.DDB		Drawn By:

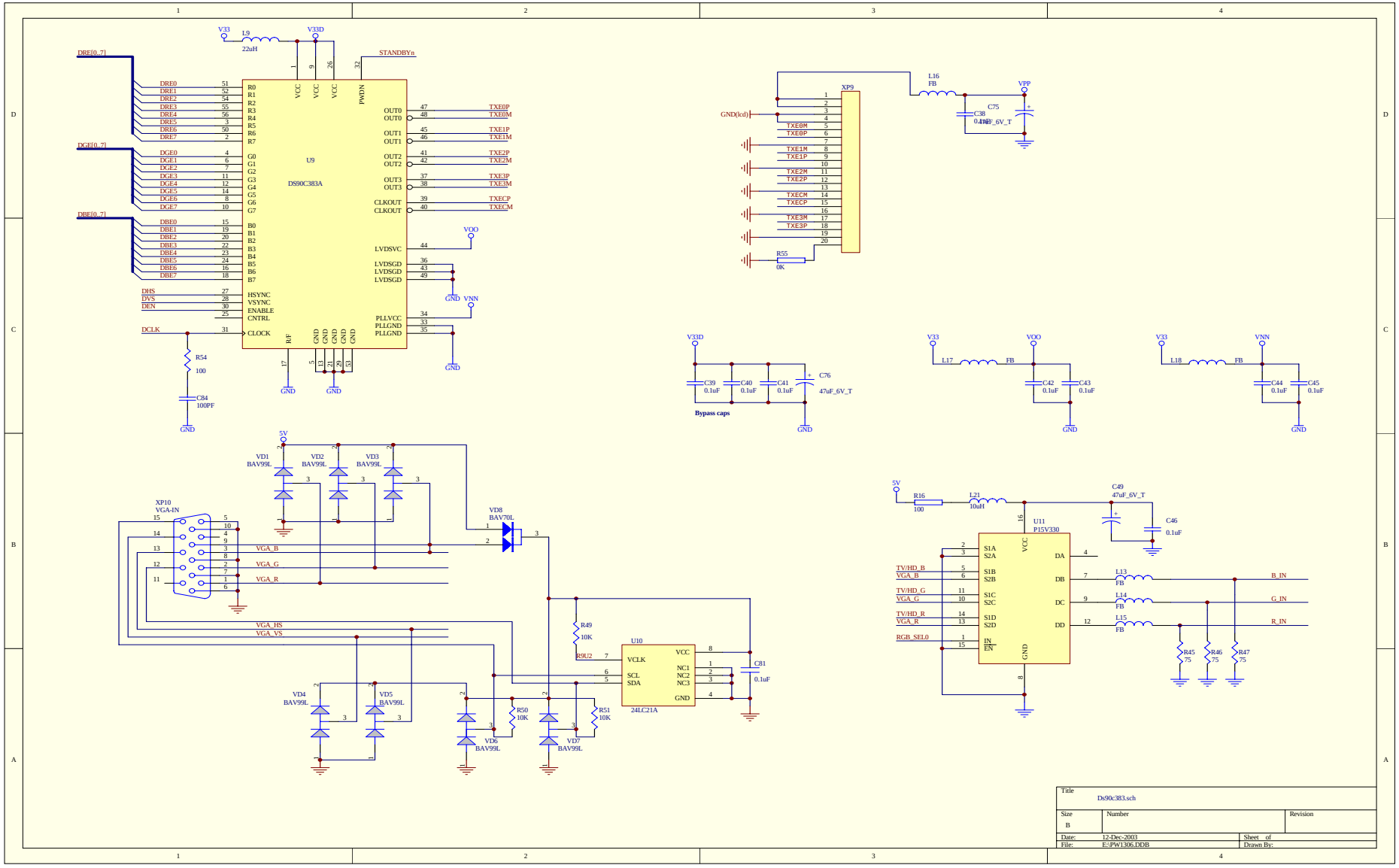

Title		
Ds90c383.sch		
Size B	Number	Revision
Date: 12-Dec-2003	Sheet of	
File: E:\PW1306.DDB	Drawn By:	

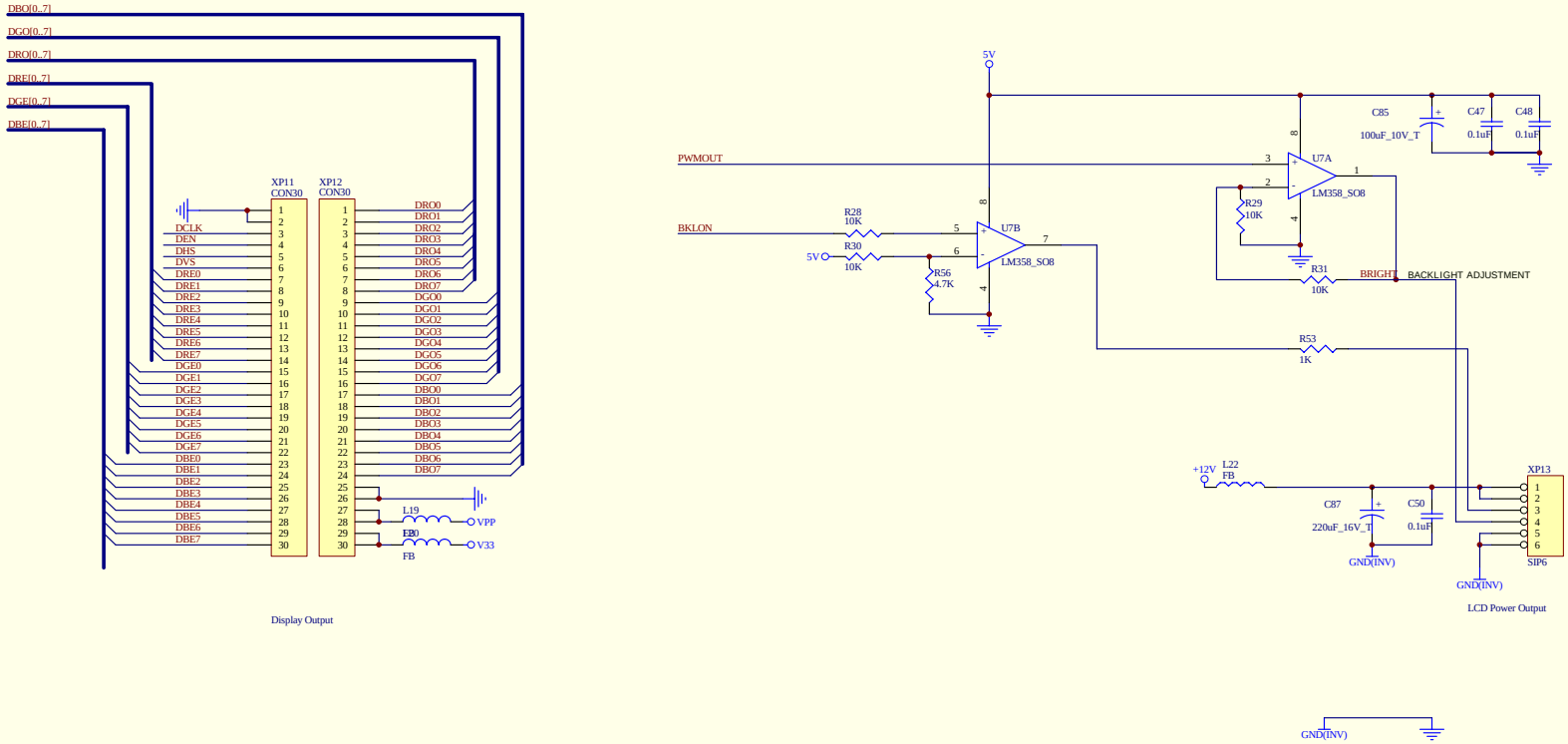

Title		
Display.sch		
Size: Orcad B	Number	Revision
Date: 12-Dec-2003	Sheet of	
File: E:\PW1306.DDB	Drawn By:	

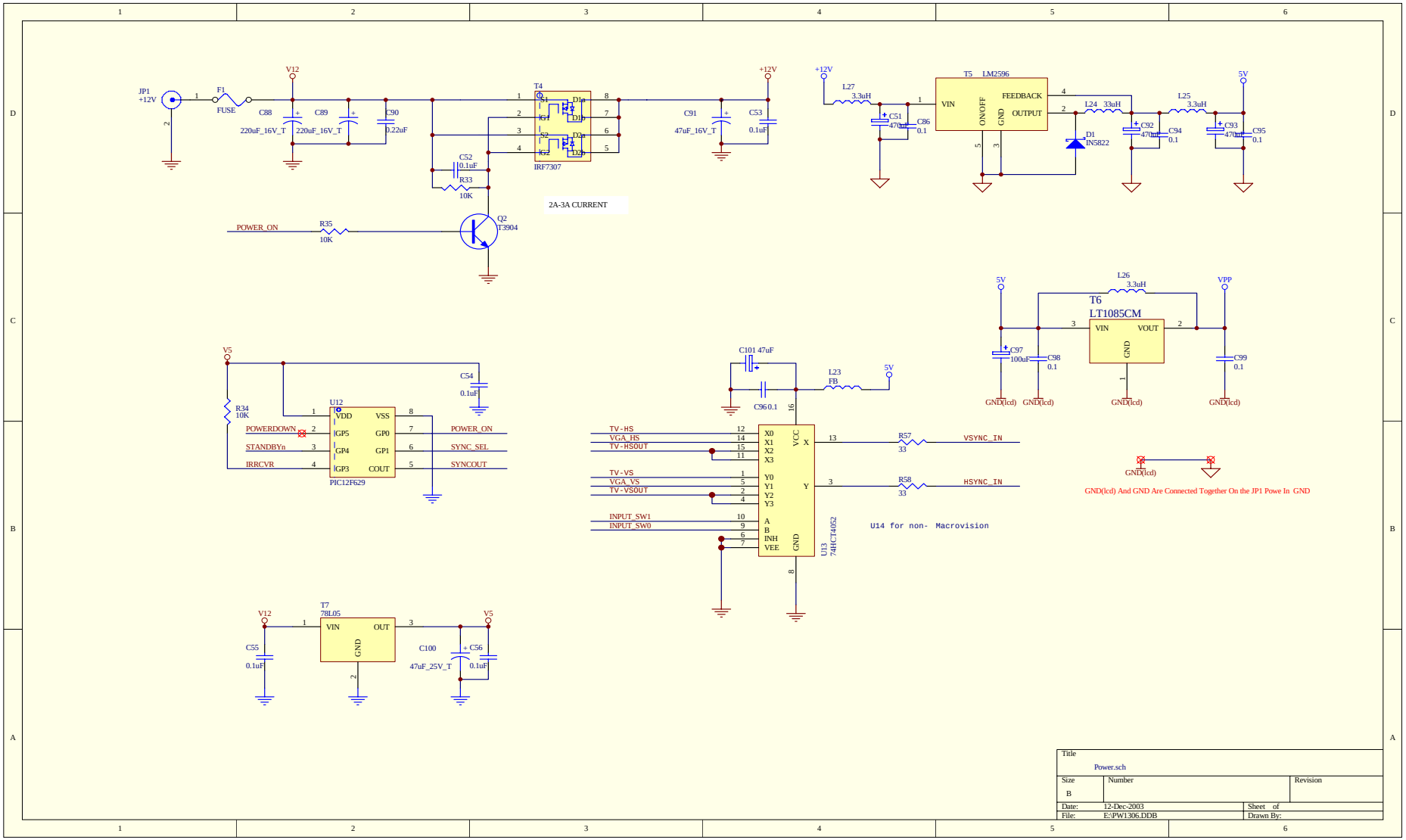
JP1
+12V
F1
FUSE
V12
C88
220uF_16V_T
C89
220uF_16V_T
C90
0.22uF
T4
IRF7307
C52
0.1uF
R33
10K
2A-3A CURRENT
POWER_ON
R35
10K
Q2
T3904
C91
47uF_16V_T
C53
0.1uF
+12V
L27
3.3uH
C51
470uF
C86
0.1
T5 LM2596
VIN
ON/OFF
GND
FEEDBACK
OUTPUT
L24 33uH
D1
IN5822
C92
470uF
C94
0.1
L25
3.3uH
C93
470uF
C95
0.1
5V
V5
R34
10K
U12
PIC12F629
VDD
VSS
GP5
GP0
GP4
GP1
GP3
COUT
POWERDOWN
STANDBYn
IRRCVR
POWER_ON
SYNC_SEL
SYNCOUT
C54
0.1uF
C101 47uF
C96 0.1
L23
FB
5V
TV-HS
VGA_HS
TV-HSOUT
TV-VS
VGA_VS
TV-VSOUT
INPUT_SW1
INPUT_SW0
X0
X1
X2
X3
Y0
Y1
Y2
Y3
A
B
INH
VEE
VCC
X
Y
GND
U13
74HCT4052
R57
33
VSYNC_IN
R58
33
HSYNC_IN
U14 for non- Macrovision
L26
3.3uH
T6
LT1085CM
VIN
VOUT
GND
C97
100uF
C98
0.1
C99
0.1
VPP
GND(lcd)
GND(lcd) And GND Are Connected Together On the JP1 Powe In GND
T7
78L05
VIN
OUT
GND
C55
0.1uF
C100
47uF_25V_T
C56
0.1uF
Title
Power.sch
Size
B
Number
Revision
Date: 12-Dec-2003
Sheet of
File: E:\PW1306.DDB
Drawn By:

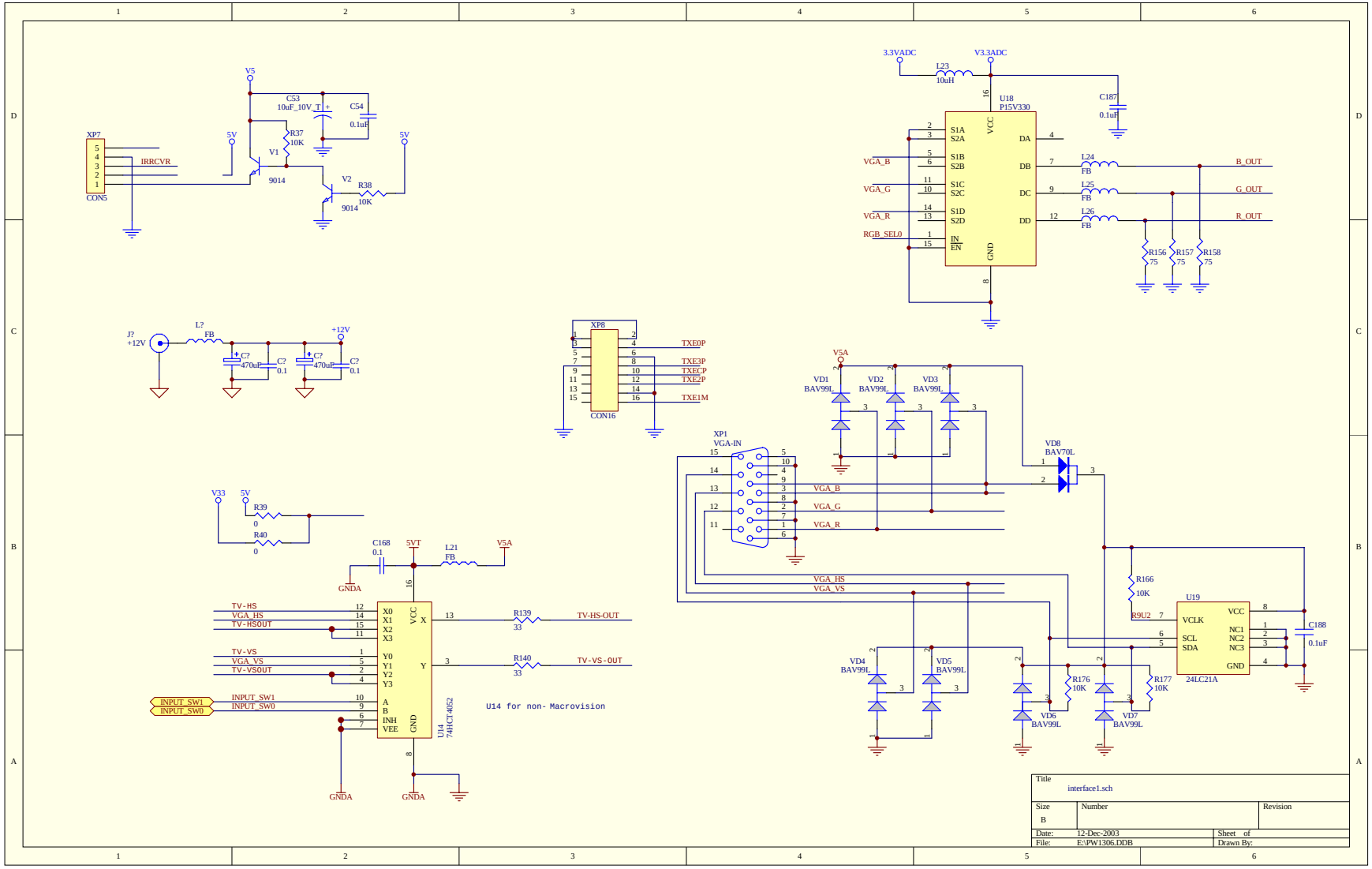
XP7
CON5
IRRCVR
V5
5V
C53
10uF_10V_T
C54
0.1uF
R37
10K
V1
9014
V2
R38
10K
9014
3.3VADC
V3.3ADC
L23
10uH
U18
P15V330
C187
0.1uF
S1A
S2A
S1B
S2B
S1C
S2C
S1D
S2D
IN
EN
VCC
GND
DA
DB
DC
DD
VGA_B
VGA_G
VGA_R
RGB_SEL0
L24
L25
L26
FB
B_OUT
G_OUT
R_OUT
R156
75
R157
75
R158
75
J?
+12V
L?
FB
C?
470uF
C?
0.1
+12V
XP8
CON16
TXE0P
TXE3P
TXE2P
TXE1M
V5A
VD1
BAV99L
VD2
BAV99L
VD3
BAV99L
XP1
VGA-IN
VGA_B
VGA_G
VGA_R
VGA_HS
VGA_VS
VD8
BAV70L
V33
5V
R39
0
R40
0
C168
0.1
5VT
L21
FB
V5A
GNDA
TV-HS
VGA_HS
TV-HSOUT
TV-VS
VGA_VS
TV-VSOUT
INPUT_SW1
INPUT_SW0
X0
X1
X2
X3
Y0
Y1
Y2
Y3
A
B
INH
VEE
X
Y
R139
33
TV-HS-OUT
R140
33
TV-VS-OUT
U14
74HCT4052
U14 for non- Macrovision
R166
10K
R9U2
U19
VCLK
SCL
SDA
VCC
NC1
NC2
NC3
GND
24LC21A
C188
0.1uF
VD4
BAV99L
VD5
BAV99L
VD6
BAV99L
VD7
BAV99L
R176
10K
R177
10K
Title
interface1.sch
Size
B
Number
Revision
Date:
12-Dec-2003
Sheet of
File:
E:\PW1306.DDB
Drawn By:

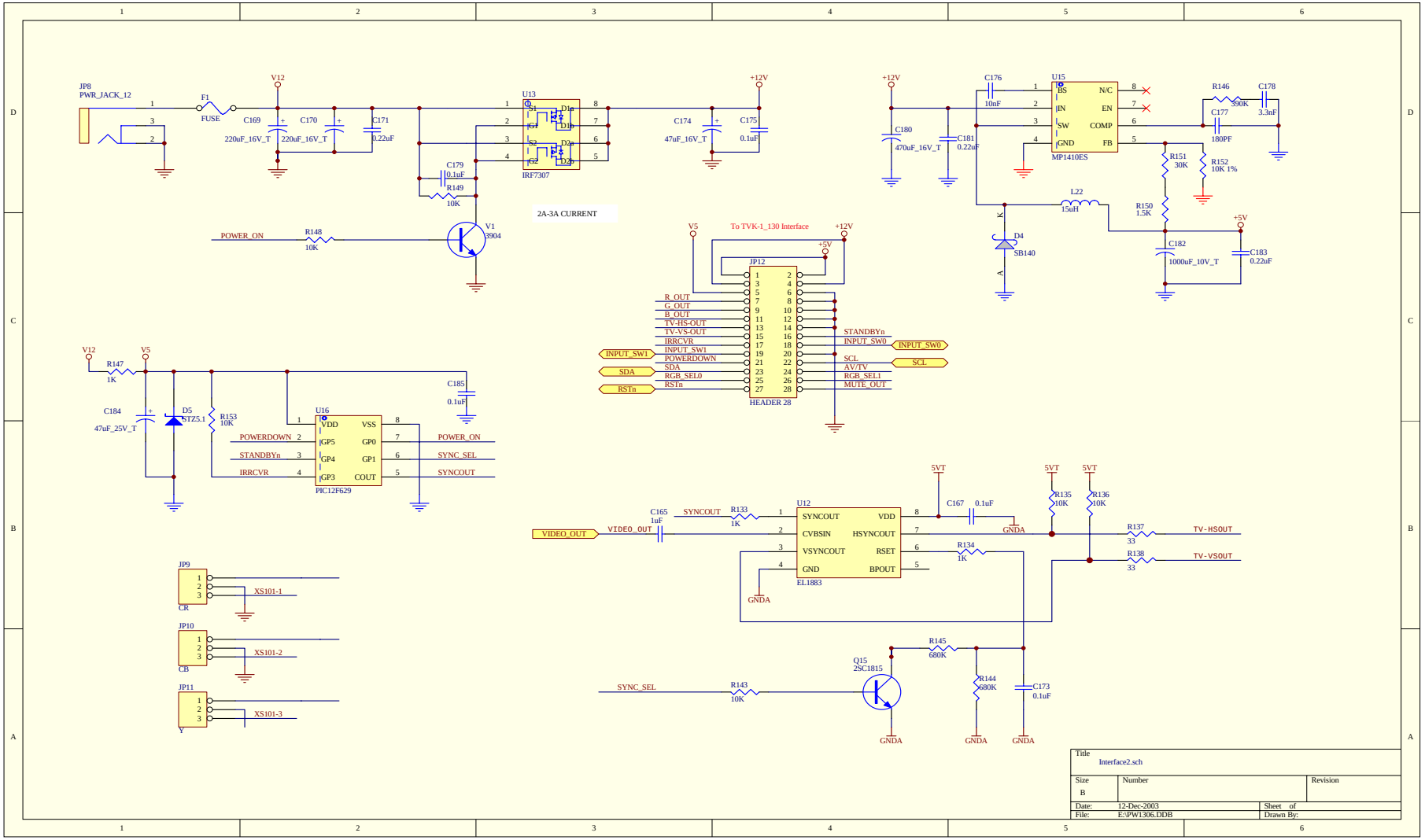
JP8
PWR_JACK_12
F1
FUSE
V12
C169
220uF_16V_T
C170
220uF_16V_T
C171
0.22uF
U13
IRF7307
C179
0.1uF
R149
10K
2A-3A CURRENT
POWER_ON
R148
10K
V1
3904
+12V
C174
47uF_16V_T
C175
0.1uF
C176
10uF
U15
MP1410ES
BS
IN
SW
GND
N/C
EN
COMP
FB
C180
470uF_16V_T
C181
0.22uF
R146
390K
C178
3.3nF
C177
180PF
R151
30K
R152
10K 1%
L22
15uH
R150
1.5K
D4
SB140
C182
1000uF_10V_T
+5V
C183
0.22uF
V5
To TVK-1_130 Interface
JP12
HEADER 28
R_OUT
G_OUT
B_OUT
TV-HS-OUT
TV-VS-OUT
IRRCVR
INPUT_SW1
POWERDOWN
SDA
RGB_SEL0
RSTn
STANDBYn
INPUT_SW0
SCL
AV/TV
RGB_SEL1
MUTE_OUT
R147
1K
C184
47uF_25V_T
D5
BTZ5.1
R153
10K
C185
0.1uF
U16
PIC12F629
VDD
VSS
GP5
GP0
GP4
GP1
GP3
COUT
STANDBYn
SYNC_SEL
SYNCOUT
JP9
CR
XS101-1
JP10
CB
XS101-2
JP11
Y
XS101-3
5VT
C165
1uF
VIDEO_OUT
SYNCOUT
R133
1K
U12
EL1883
SYNCOUT
CVBSIN
VSYNCOUT
GND
VDD
HSYNCOUT
RSET
BPOUT
C167
0.1uF
GNDA
R135
10K
R136
10K
R137
33
TV-HSOUT
R138
33
TV-VSOUT
R134
1K
R145
680K
Q15
2SC1815
R143
10K
R144
680K
C173
0.1uF
Title
Interface2.sch
Size
B
Number
Revision
Date:
12-Dec-2003
Sheet of
File:
E:\PW1306.DDB
Drawn By: