彩电维修资料网
TV160
http://www.tv160.net
彩电维修资料网
http://www.tv160.net

MODEL	DELETE	ADD
CH0/CH1	C133	JUMPER(R132)
HK0/HK1	C133	R132
CHK		C133 R132

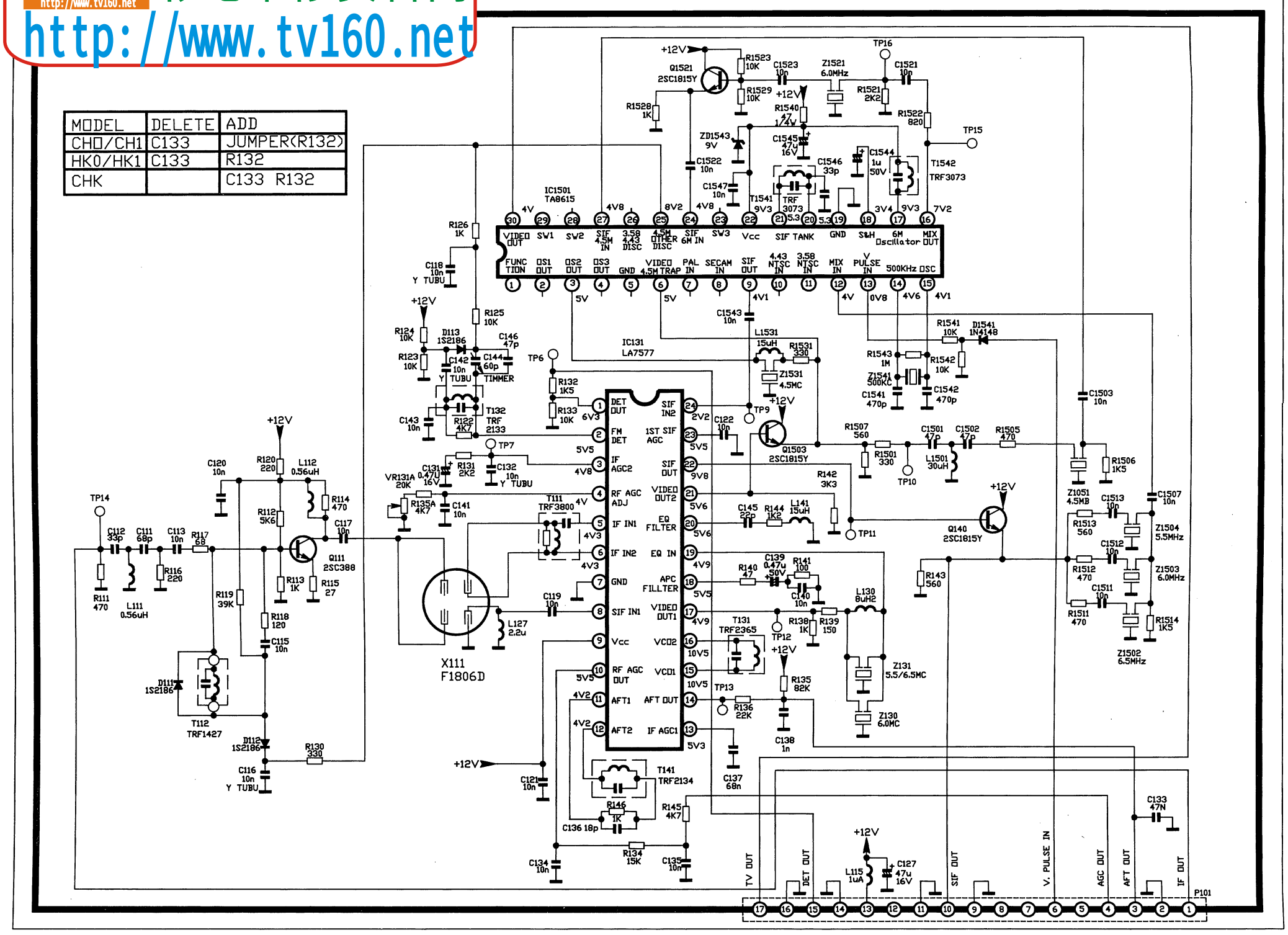

01-250092-100

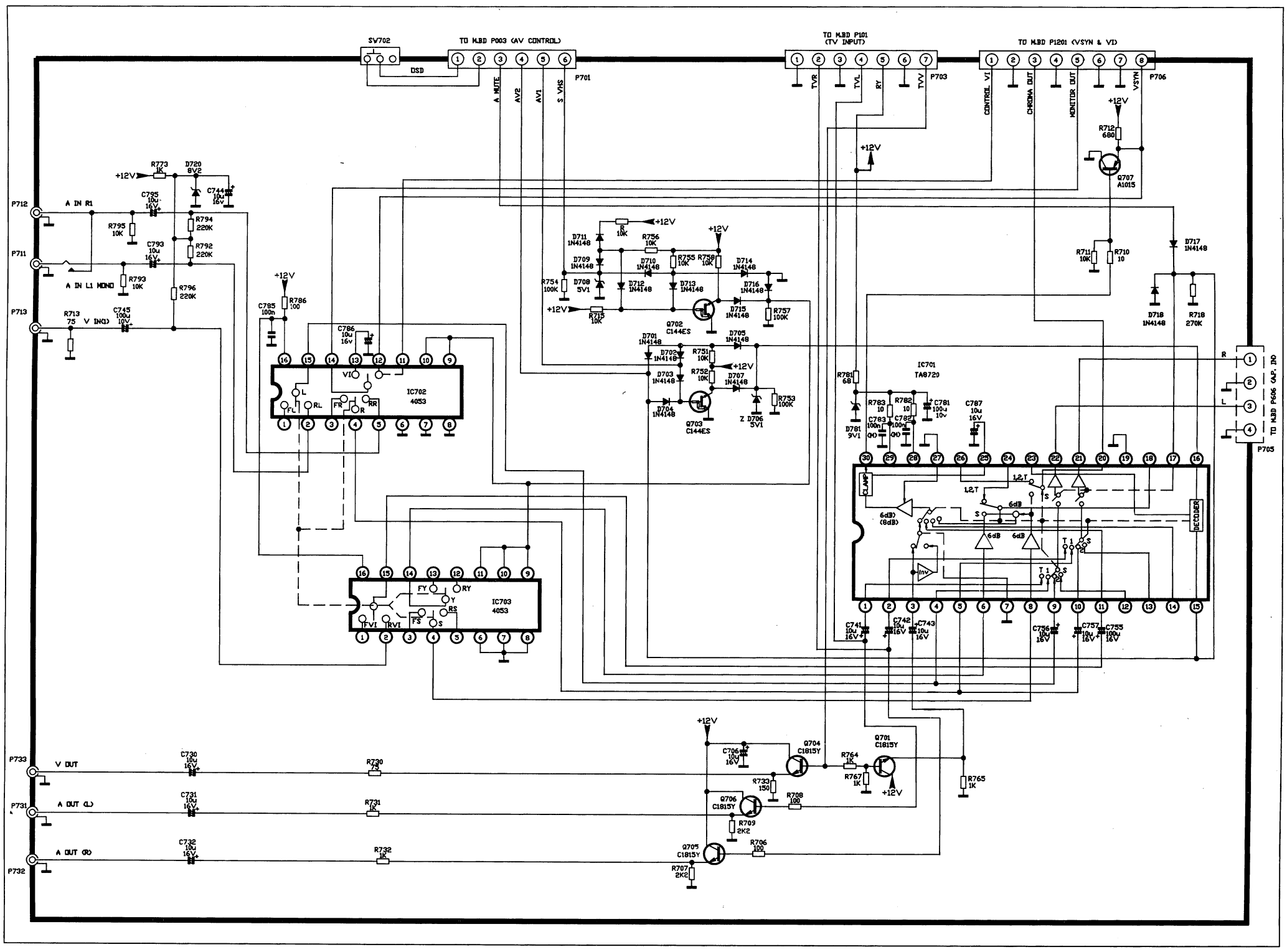

更多彩电维修资料请到《彩电维修资料网》http://www.tv160.com查询！