康佳 T2102

彩电维修资料网 TV160 http://www.tv160.net

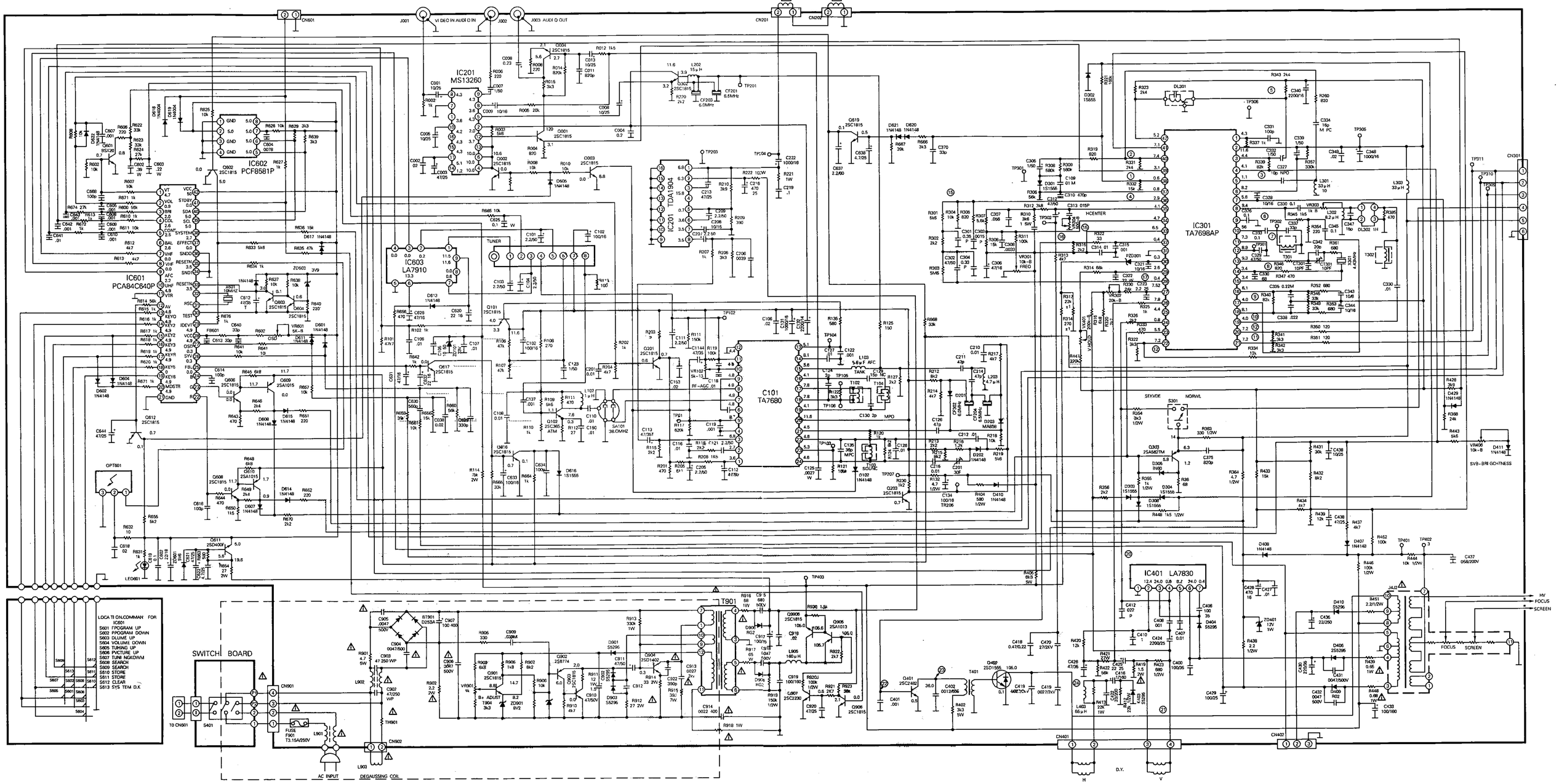

HANDSET BOARD

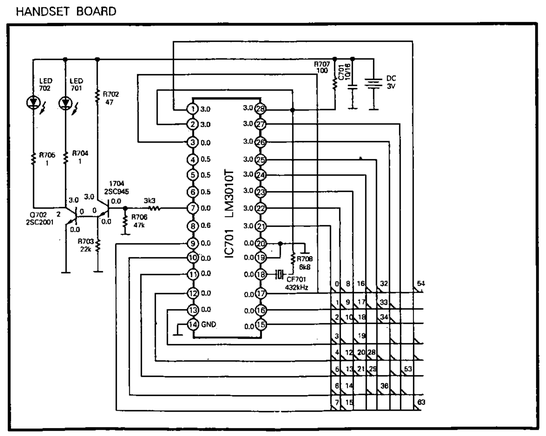

CRT BOARD

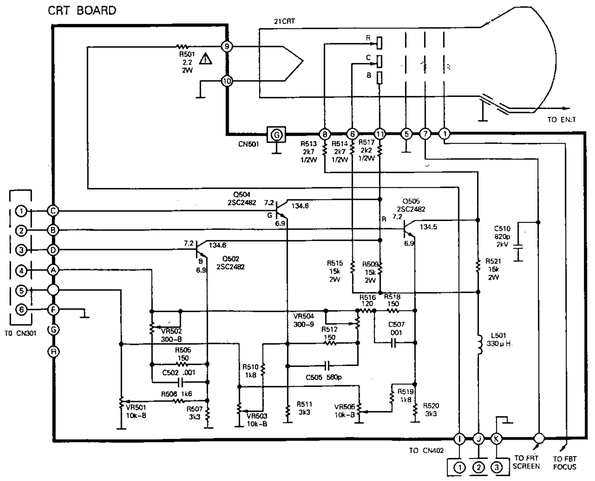
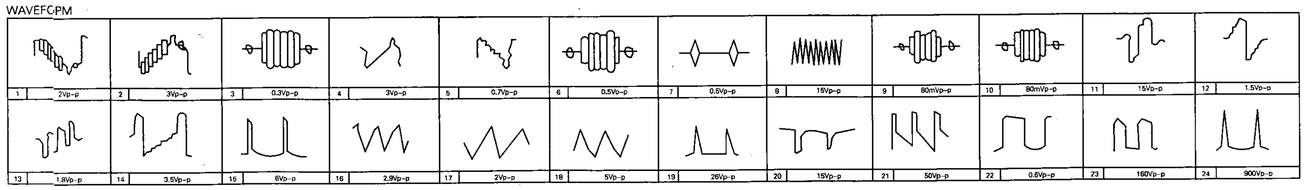
WAVEFORM