6D75机芯数字板2

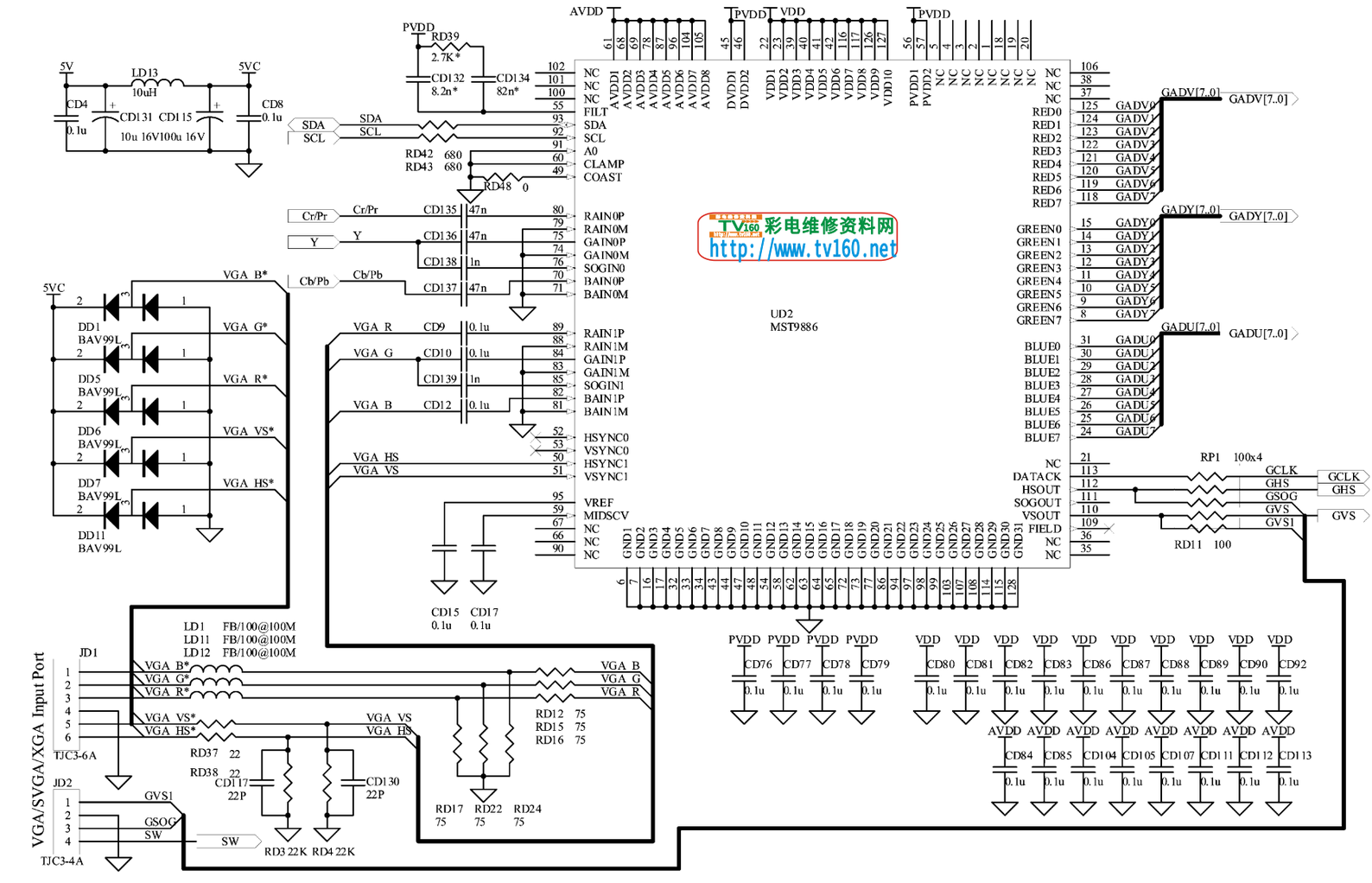
UD2
MST9886
VGA/SVGA/XGA Input Port
JD1
JD2
TJC3-6A
TJC3-4A
GADV[7..0]
GADY[7..0]
GADU[7..0]
RP1 100x4
GCLK
GHS
GSOG
GVS
GVS1
SDA
SCL
Cr/Pr
Y
Cb/Pb
VGA B*
VGA G*
VGA R*
VGA VS*
VGA HS*
VGA B
VGA G
VGA R
VGA VS
VGA HS
SW
LD1 FB/100@100M
LD11 FB/100@100M
LD12 FB/100@100M
RD11 100
RD12 75
RD15 75
RD16 75
RD17 75
RD22 75
RD24 75
RD37 22
RD38 22
CD117 22P
CD130 22P
RD32 22K
RD42 22K
CD15 0.1u
CD17 0.1u
AVDD
PVDD
VDD
5V
5VC
LD13 10uH
CD4 0.1u
CD131 10u 16V
CD115 100u 16V
CD8 0.1u
RD39 2.7K*
CD132 8.2n*
CD134 82n*
RD42 680
RD43 680
RD48 0
CD135 47n
CD136 47n
CD138 1n
CD137 47n
CD9 0.1u
CD10 0.1u
CD139 1n
CD12 0.1u
DD1 BAV99L
DD5 BAV99L
DD6 BAV99L
DD7 BAV99L
DD11 BAV99L
TV160 彩电维修资料网
http://www.tv160.net

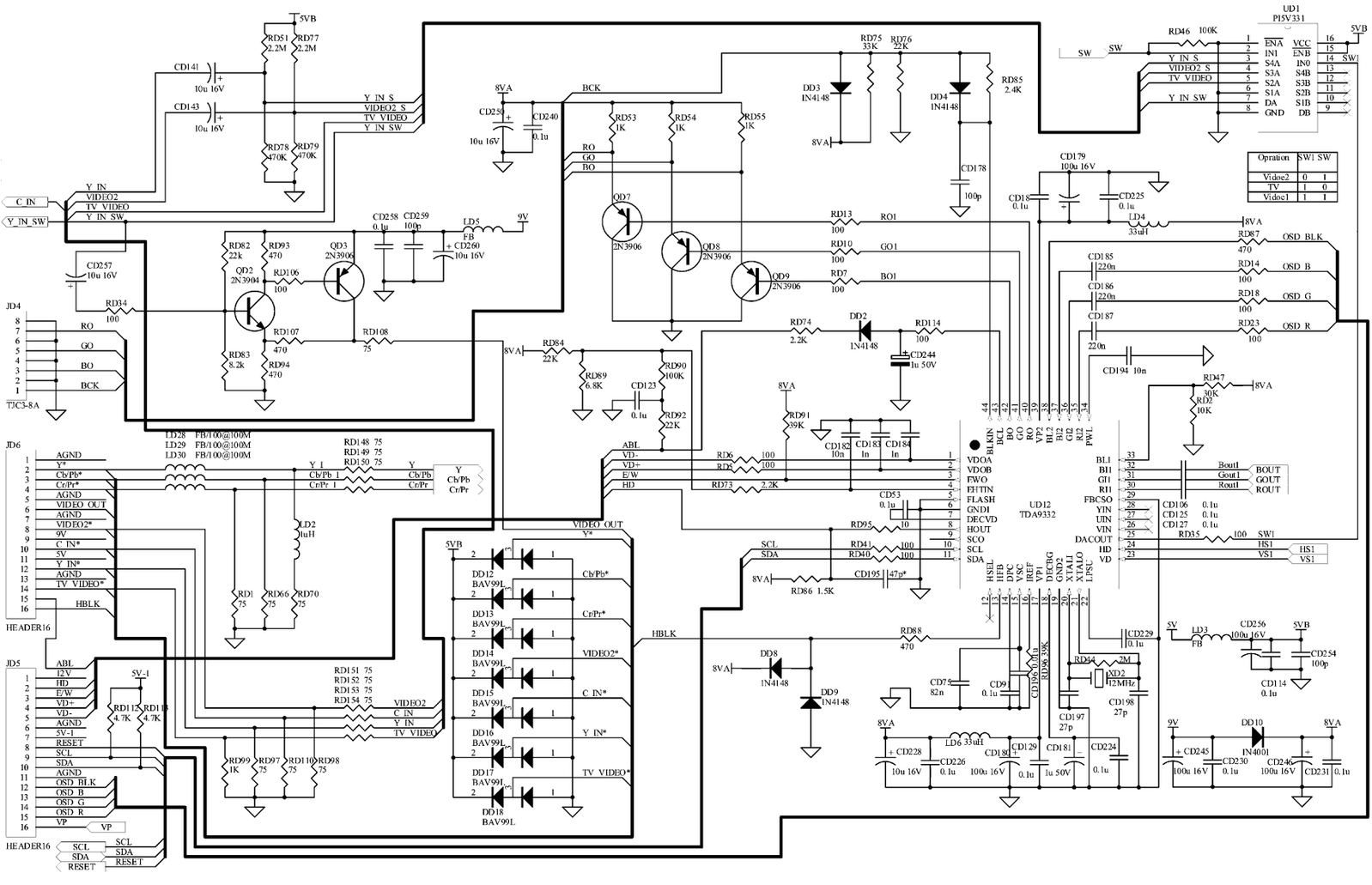
UD1
PI5V331
UD12
TDA9332
JD4
TJC3-8A
JD6
HEADER16
JD5
HEADER16
5VB
8VA
9V
5V-1
Y_IN_S
VIDEO2_S
TV_VIDEO
Y_IN_SW
C_IN
Y_IN
VIDEO2
BCK
RO
GO
BO
SW
OSD_BLK
OSD_B
OSD_G
OSD_R
HBLK
VIDEO OUT
Y*
Cb/Pb*
Cr/Pr*
VIDEO2*
C_IN*
Y_IN*
TV_VIDEO*
SCL
SDA
RESET
VP
BOUT
GOUT
ROUT
HS1
VS1
Opration SW1 SW
Vidoe2 0 1
TV 1 0
Vidoe1 1 1