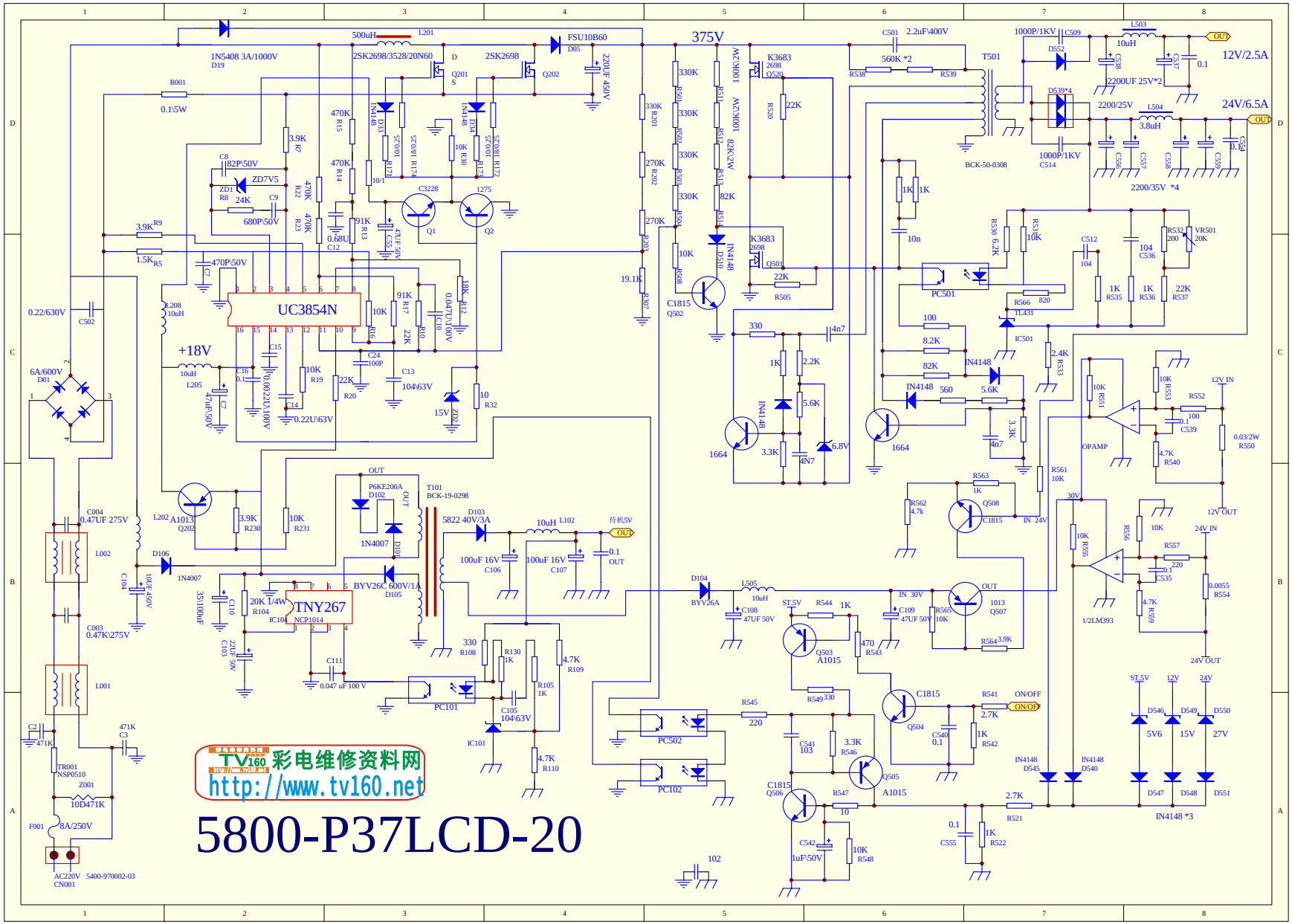
UC3854N
TNY267
375V
12V/2.5A
24V/6.5A
+18V
T501
T101
BCK-19-0298
BCK-50-0308
PC501
PC101
PC502
PC102
OPAMP
1/2LM393
ON/OFF
AC220V 5400-970002-03
CN001
TV160 彩电维修资料网
http://www.tv160.net
5800-P37LCD-20