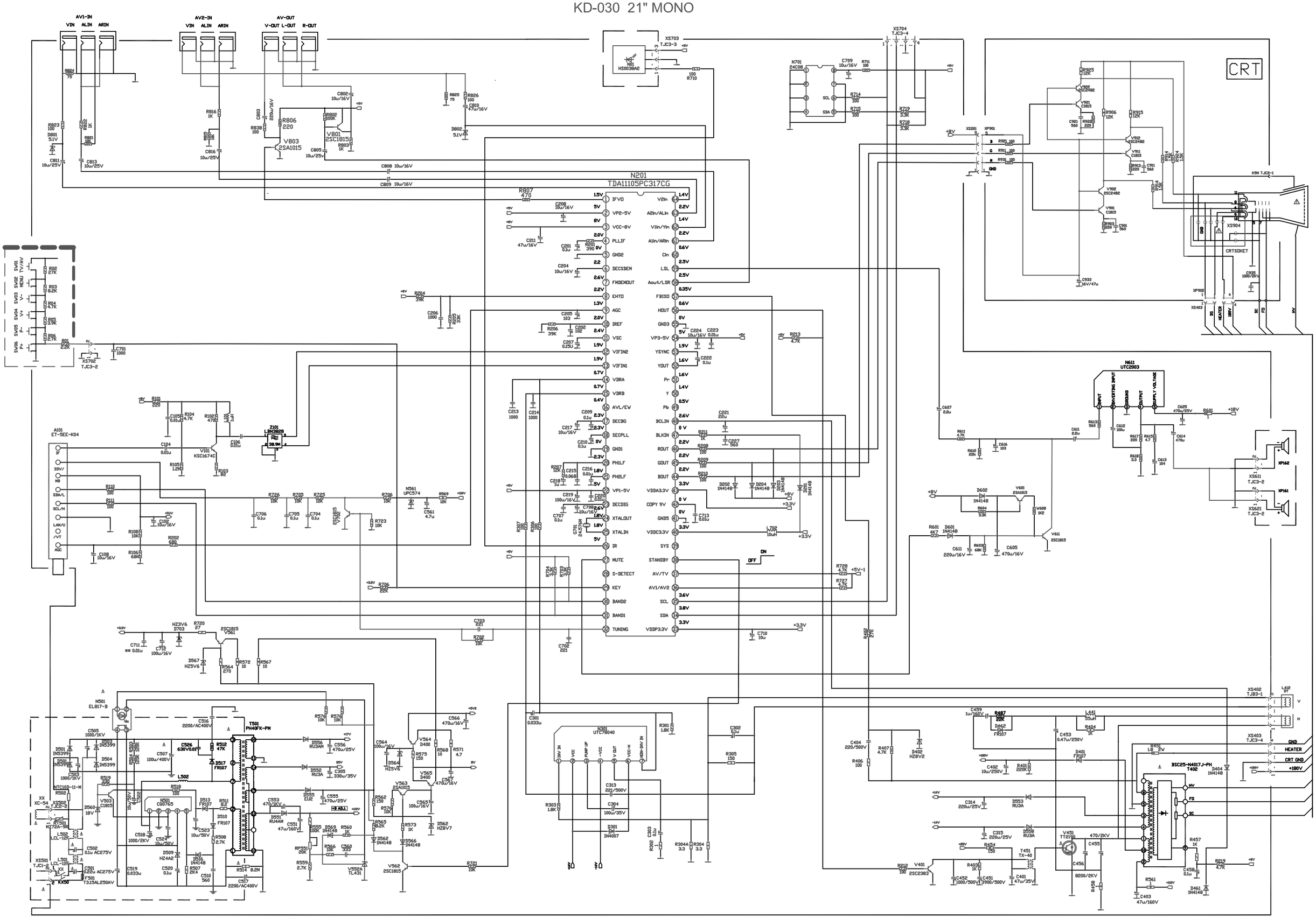KD-030 21" MONO