TV160 彩电维修资料网
http://www.tv160.net

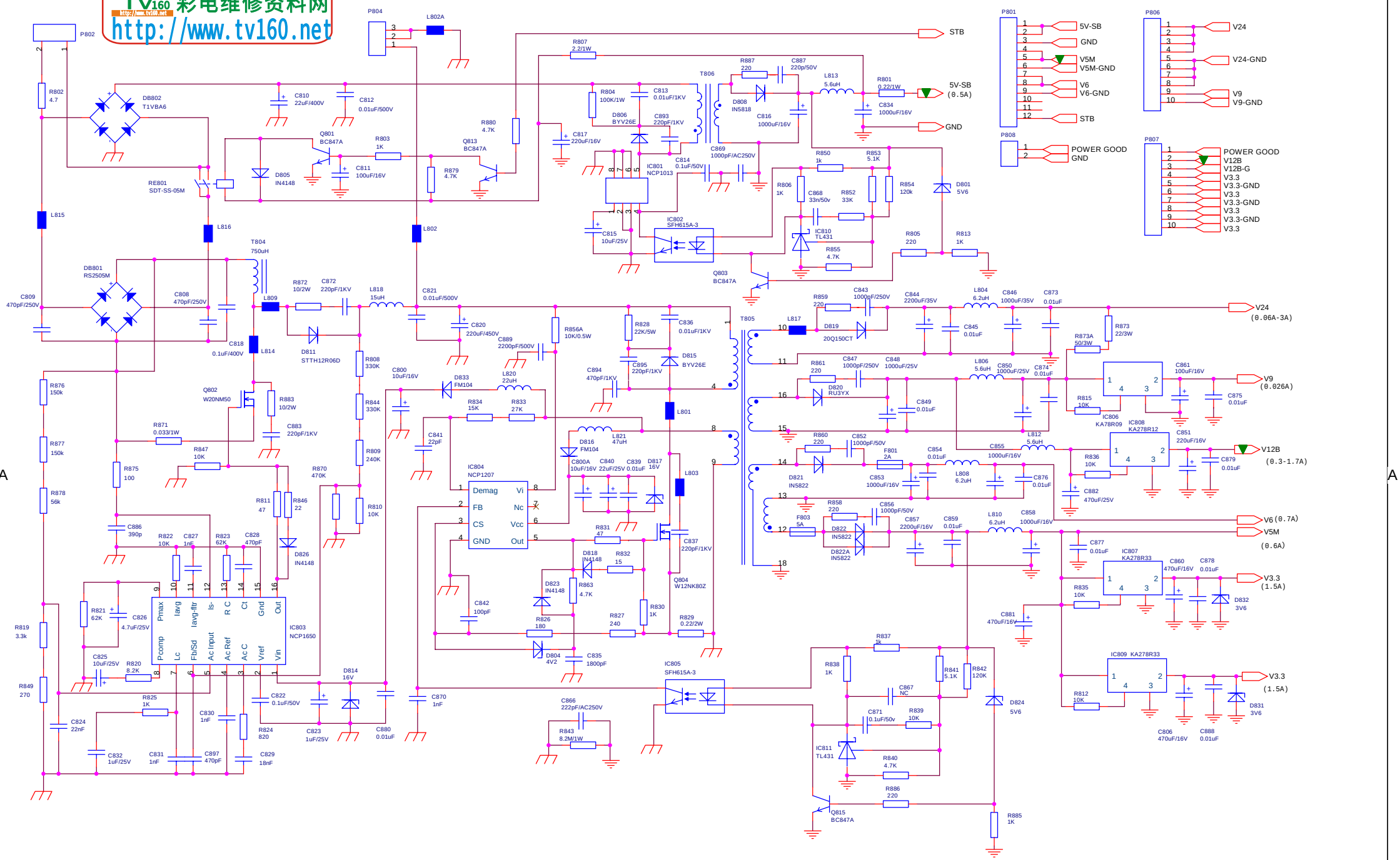

	DLP44B28-POWER SUPPLY
Title	TCL MULTIMEDIA ELECTRONIC R&D CENTER
Size A3	Document Number <Doc>
Rev	
Date: 星期二, 二月 22, 2005	Sheet 1 of 1