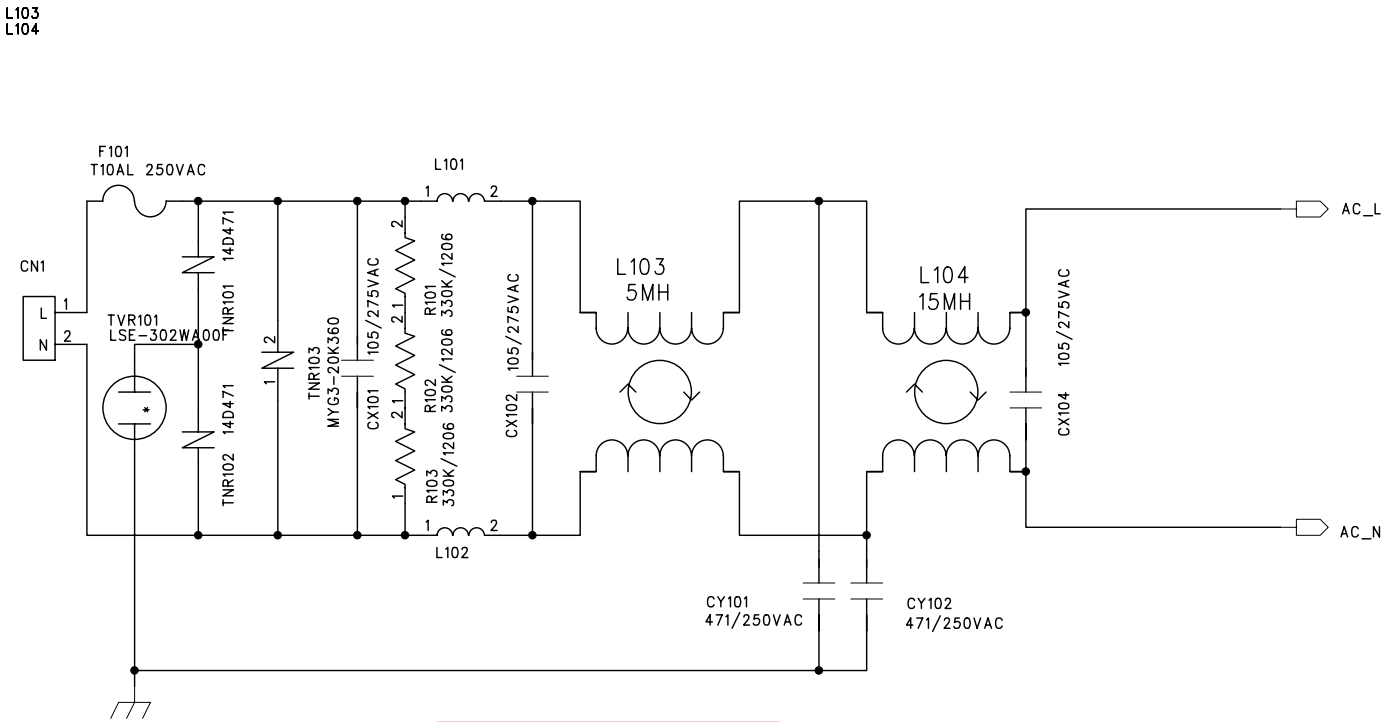

彩电维修资料网
TV160
http://www.tv160.net

左纯祥

日期
：2005.11.17
09:33:18 +
08'00'

彩电维修资料网 TV160 http://www.tv160.net

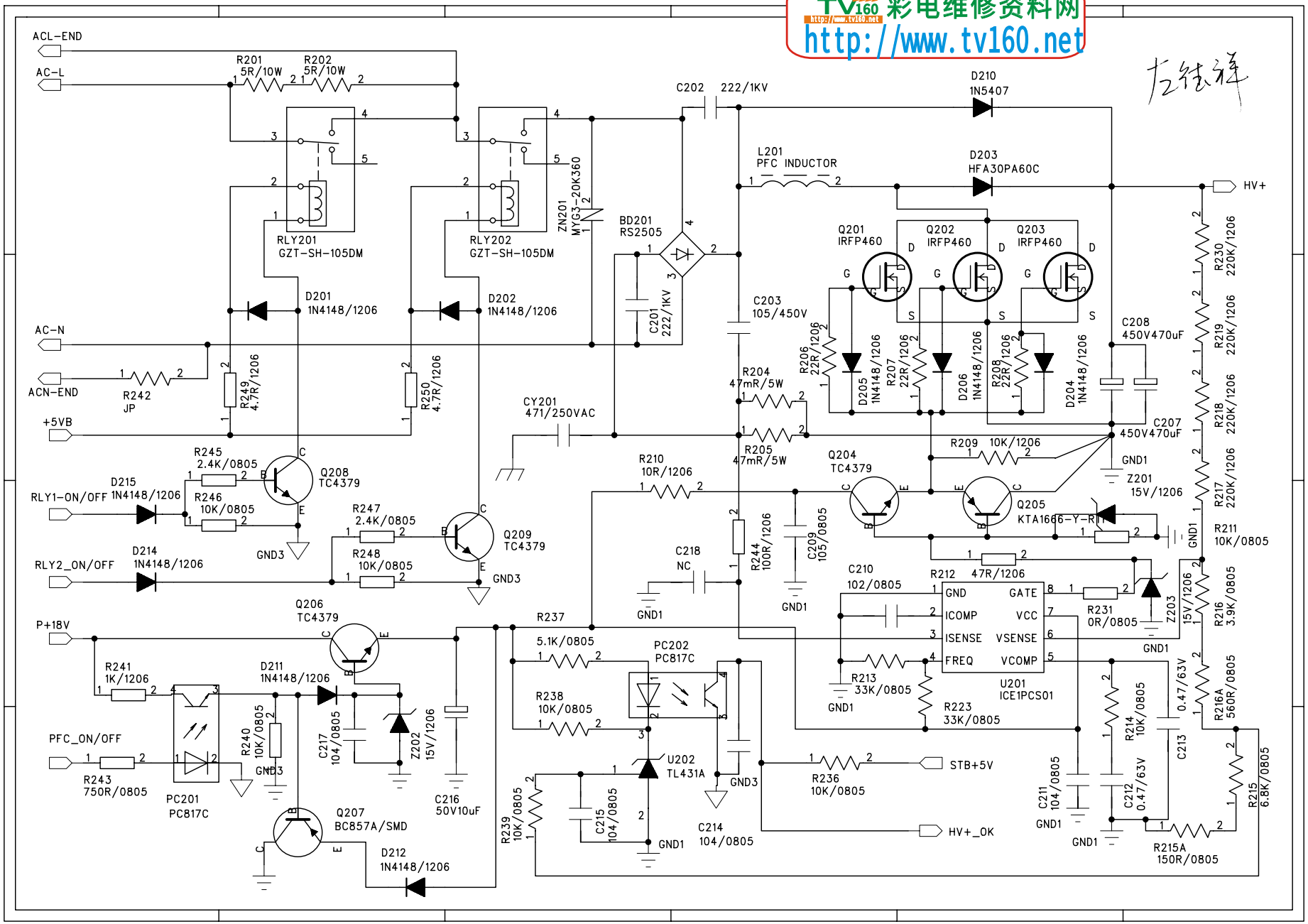

彩电维修资料网 TV160 http://www.tv160.net
http://www.tv160.net

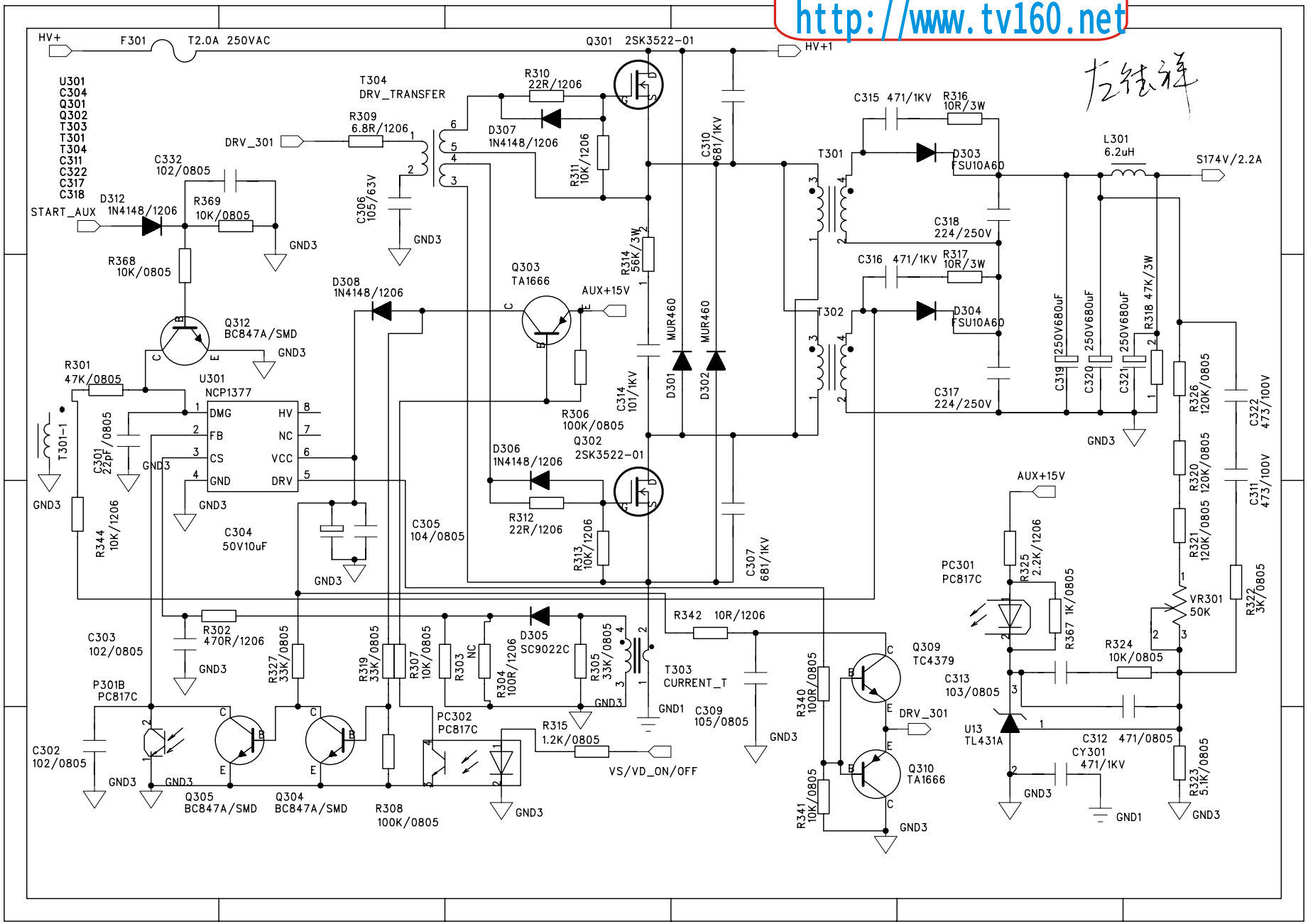

彩电维修资料网
TV160
http://www.tv160.net

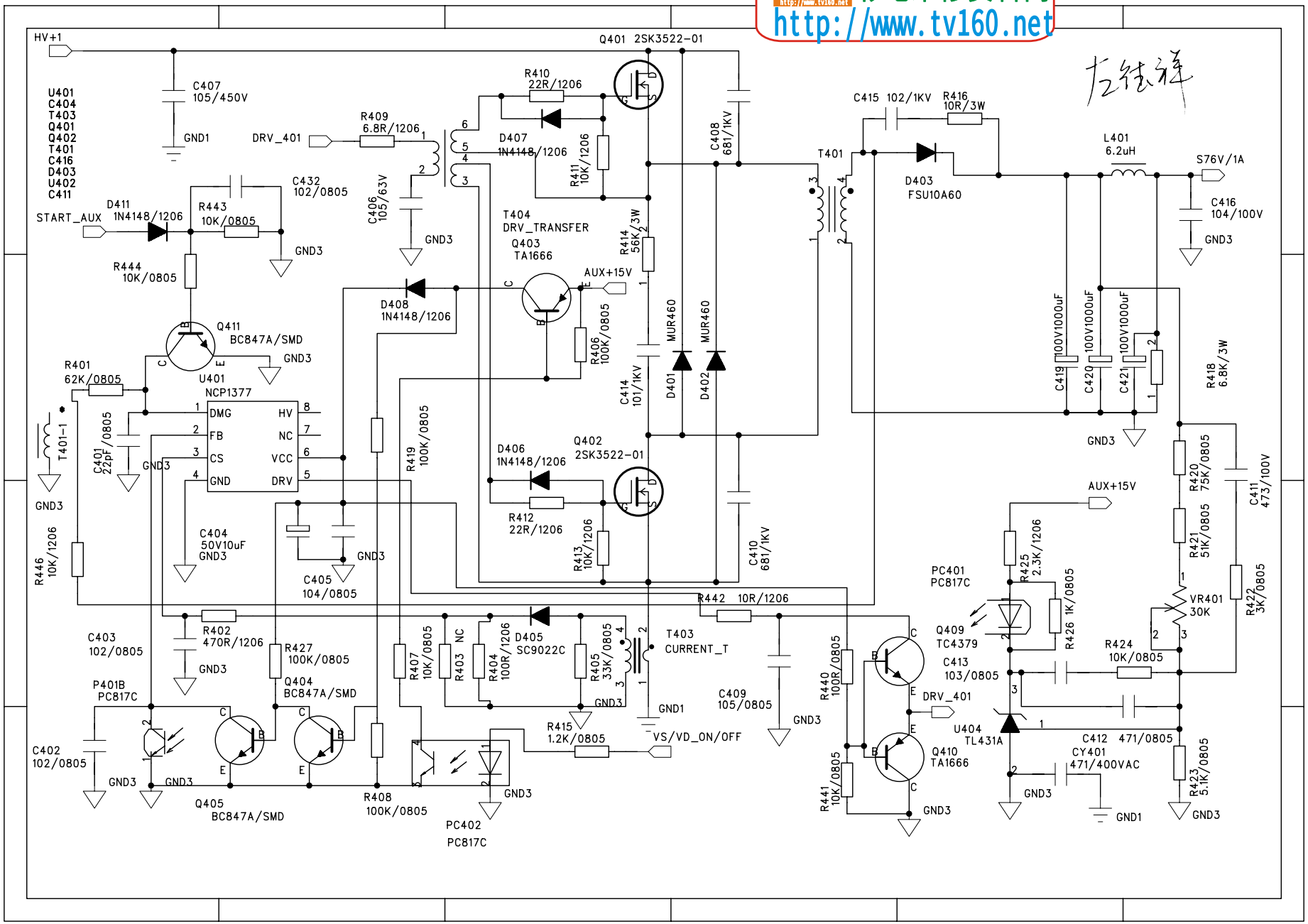

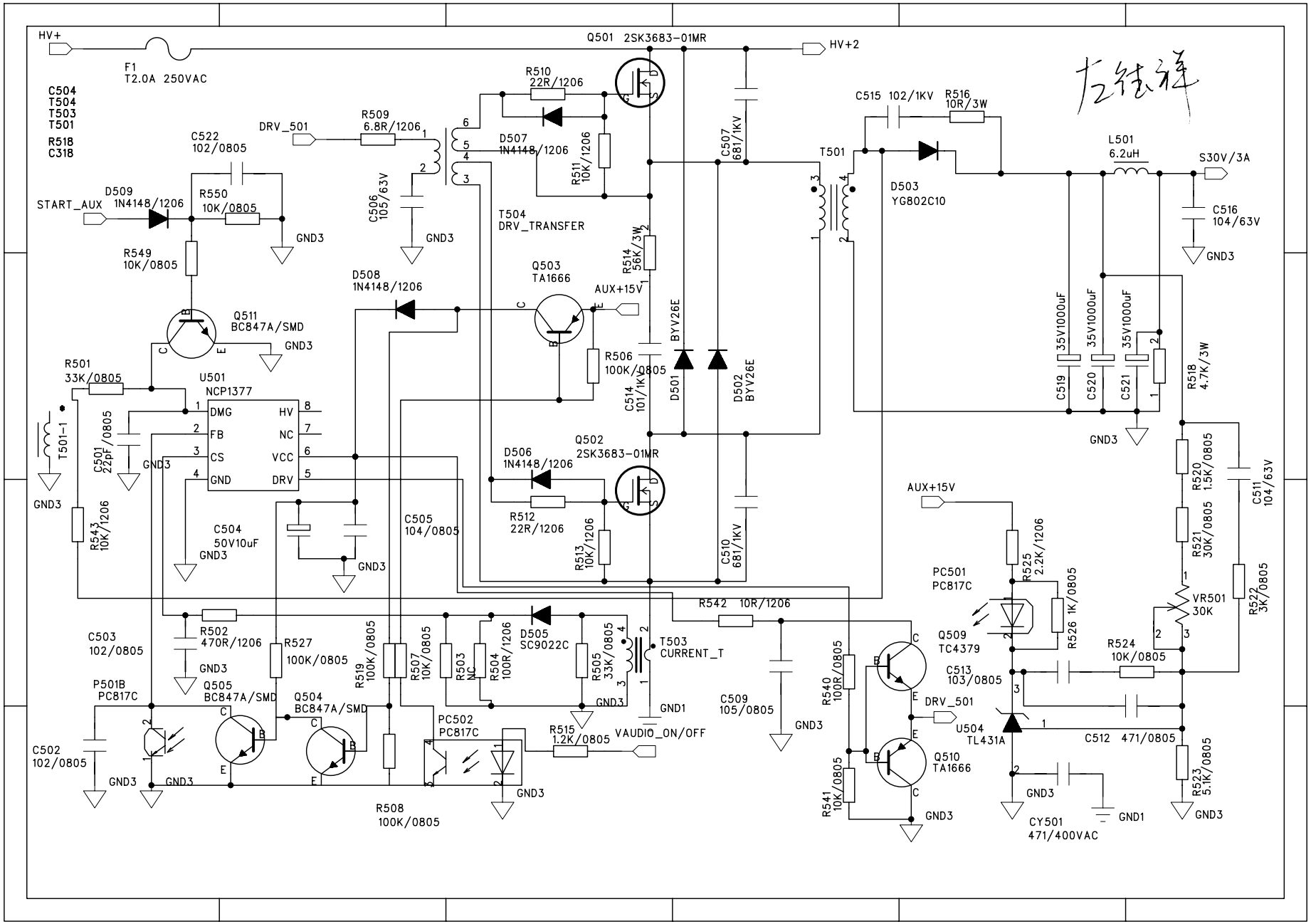
HV+
F1
T2.0A 250VAC
Q501 2SK3683-01MR
HV+2
C504
T504
T503
T501
R518
C318
R510
22R/1206
R509
6.8R/1206
DRV_501
C522
102/0805
D507
1N4148/1206
R511
10K/1206
C507
681/1KV
C515 102/1KV
R516
10R/3W
T501
L501
6.2uH
S30V/3A
START_AUX
D509
1N4148/1206
R550
10K/0805
C506
105/63V
T504
DRV_TRANSFER
D503
YG802C10
C516
104/63V
GND3
R549
10K/0805
R514
56K/3W
Q503
TA1666
AUX+15V
D508
1N4148/1206
Q511
BC847A/SMD
BYV26E
R506
100K/0805
C514
101/1KV
D501
D502
BYV26E
35V1000uF
C519
C520
C521
R518
4.7K/3W
R501
33K/0805
U501
NCP1377
DMG
FB
CS
GND
HV
NC
VCC
DRV
T501-1
C501
22pF/0805
D506
1N4148/1206
Q502
2SK3683-01MR
R520
1.5K/0805
C511
104/63V
R543
10K/1206
C504
50V10uF
C505
104/0805
R512
22R/1206
R513
10K/1206
C510
681/1KV
AUX+15V
R525
2.2K/1206
R521
30K/0805
PC501
PC817C
R526 1K/0805
VR501
30K
R522
3K/0805
R542 10R/1206
R502
470R/1206
C503
102/0805
R527
100K/0805
R519
100K/0805
R507
10K/0805
R503
NC
R504
100R/1206
D505
SC9022C
R505
33K/0805
T503
CURRENT_T
Q509
TC4379
R524
10K/0805
C513
103/0805
P501B
PC817C
Q505
BC847A/SMD
Q504
BC847A/SMD
PC502
PC817C
R515
1.2K/0805
VAUDIO_ON/OFF
GND1
C509
105/0805
R540
100R/0805
DRV_501
U504
TL431A
C512 471/0805
C502
102/0805
R508
100K/0805
R541
10K/0805
Q510
TA1666
R523
5.1K/0805
CY501
471/400VAC

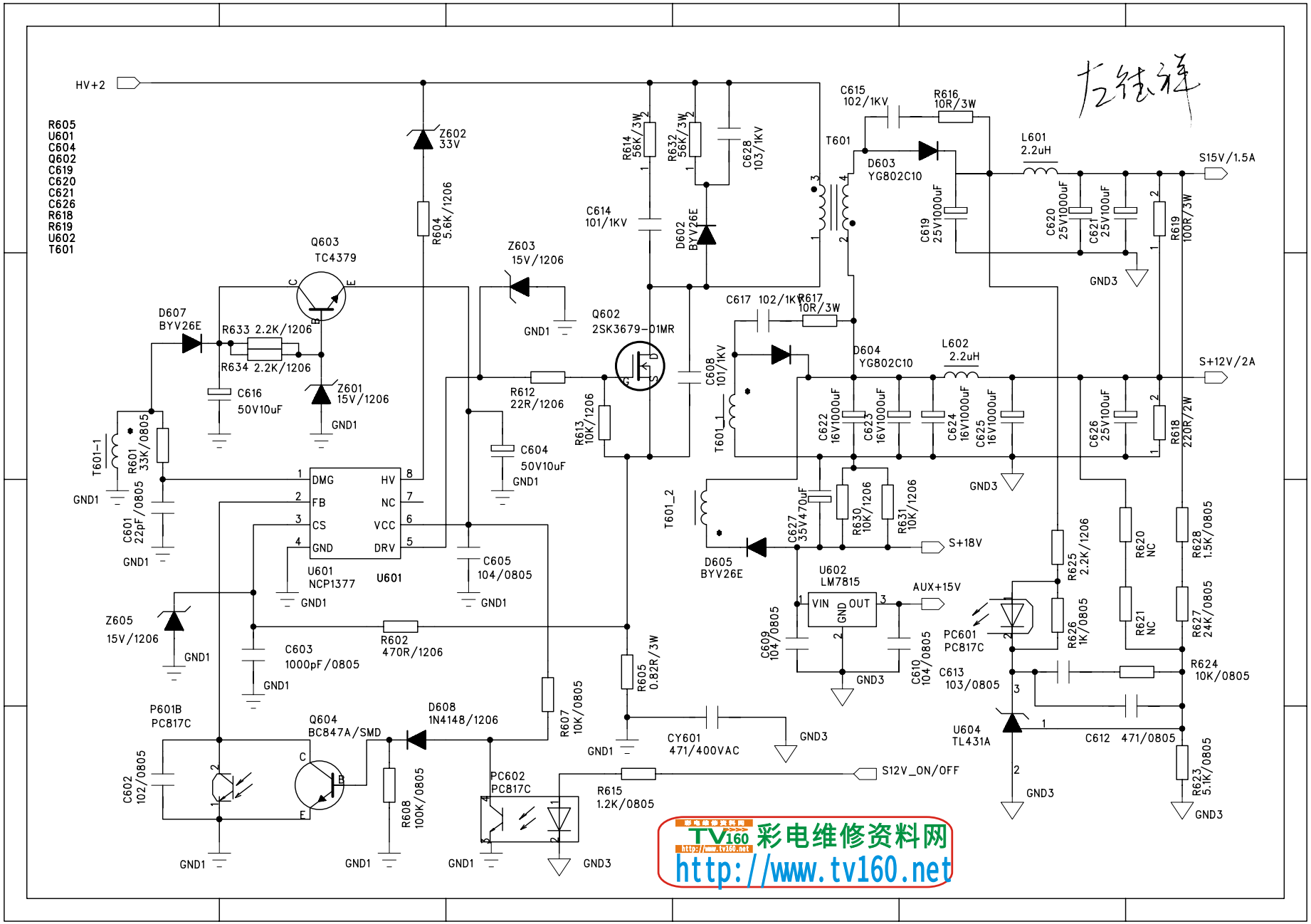
HV+2
R605
U601
C604
Q602
C619
C620
C621
C626
R618
R619
U602
T601
Z602
33V
R604
5.6K/1206
Q603
TC4379
D607
BYV26E
R633 2.2K/1206
R634 2.2K/1206
C616
50V10uF
Z601
15V/1206
GND1
T601-1
R601
33K/0805
C601
22pF/0805
DMG
FB
CS
GND
HV
NC
VCC
DRV
U601
NCP1377
C605
104/0805
Z605
15V/1206
C603
1000pF/0805
R602
470R/1206
P601B
PC817C
Q604
BC847A/SMD
D608
1N4148/1206
R607
10K/0805
C602
102/0805
R608
100K/0805
PC602
PC817C
Z603
15V/1206
C604
50V10uF
R612
22R/1206
R613
10K/1206
Q602
2SK3679-D1MR
R614
56K/3W
R632
56K/3W
C628
103/1KV
C614
101/1KV
D602
BYV26E
R605
0.82R/3W
CY601
471/400VAC
GND3
R615
1.2K/0805
S12V_ON/OFF
C615
102/1KV
R616
10R/3W
T601
D603
YG802C10
L601
2.2uH
S15V/1.5A
C619
25V1000uF
C620
25V1000uF
C621
25V100uF
R619
100R/3W
C617 102/1KV
R617
10R/3W
C608
101/1KV
D604
YG802C10
L602
2.2uH
S+12V/2A
T601_1
C622
16V1000uF
C623
16V1000uF
C624
16V1000uF
C625
16V1000uF
C626
25V100uF
R618
220R/2W
T601_2
C627
35V470uF
R630
10K/1206
R631
10K/1206
S+18V
D605
BYV26E
U602
LM7815
VIN
GND
OUT
AUX+15V
C609
104/0805
C610
104/0805
PC601
PC817C
R625
2.2K/1206
R626
1K/0805
R620
NC
R621
NC
R628
1.5K/0805
R627
24K/0805
C613
103/0805
R624
10K/0805
U604
TL431A
C612 471/0805
R623
5.1K/0805
左结祥
TV160 彩电维修资料网
http://www.tv160.net

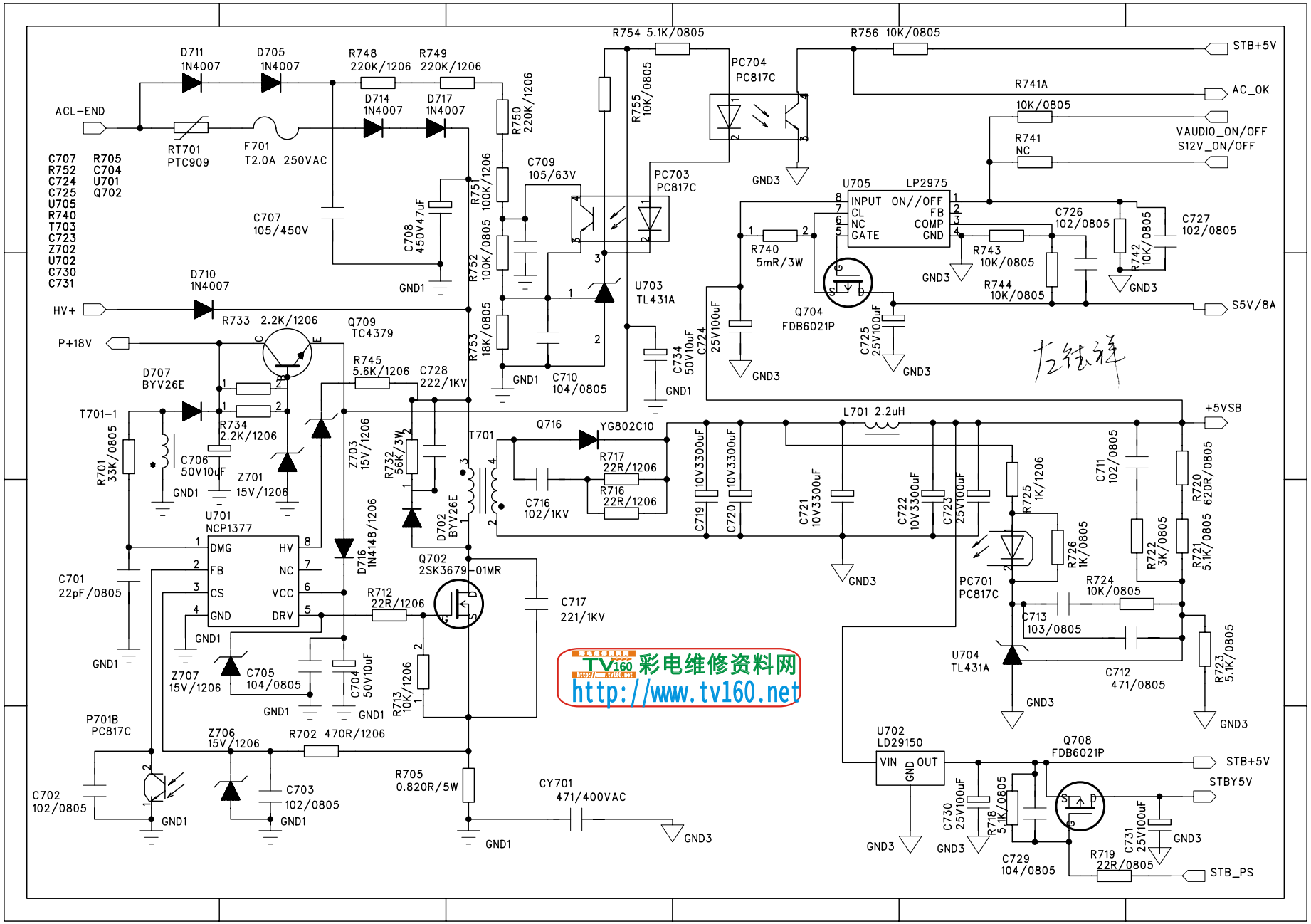

TV160 彩电维修资料网
http://www.tv160.net

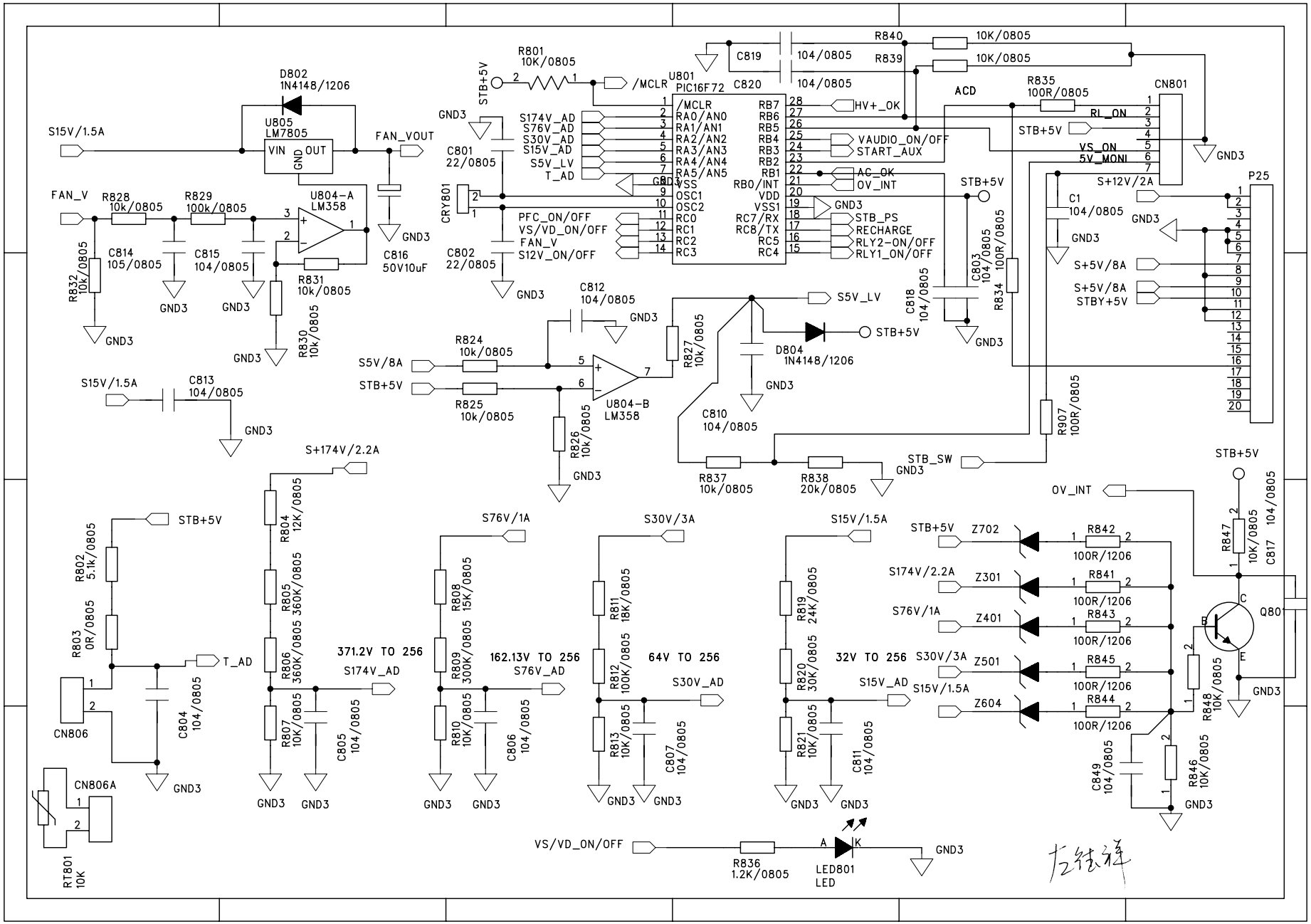
U801
PIC16F72
/MCLR
RA0/AN0
RA1/AN1
RA2/AN2
RA3/AN3
RA4/AN4
RA5/AN5
VSS
OSC1
OSC2
RC0
RC1
RC2
RC3
RB7
RB6
RB5
RB4
RB3
RB2
RB1
RB0/INT
VDD
VSS1
RC7/RX
RC8/TX
RC5
RC4
S174V_AD
S76V_AD
S30V_AD
S15V_AD
S5V_LV
T_AD
PFC_ON/OFF
VS/VD_ON/OFF
FAN_V
S12V_ON/OFF
HV+_OK
VAUDIO_ON/OFF
START_AUX
AC_OK
OV_INT
STB_PS
RECHARGE
RLY2-ON/OFF
RLY1_ON/OFF
D802
1N4148/1206
U805
LM7805
VIN
OUT
GND
S15V/1.5A
FAN_VOUT
C816
50V10uF
U804-A
LM358
U804-B
LM358
D804
1N4148/1206
CN801
RL_ON
VS_ON
5V_MONI
S+12V/2A
S+5V/8A
STBY+5V
P25
CN806
CN806A
RT801
10K
S+174V/2.2A
371.2V TO 256
162.13V TO 256
64V TO 256
32V TO 256
S76V/1A
S30V/3A
S15V/1.5A
S174V/2.2A
Z702
Z301
Z401
Z501
Z604
Q80
LED801
LED
STB_SW
ACD
GND3
STB+5V

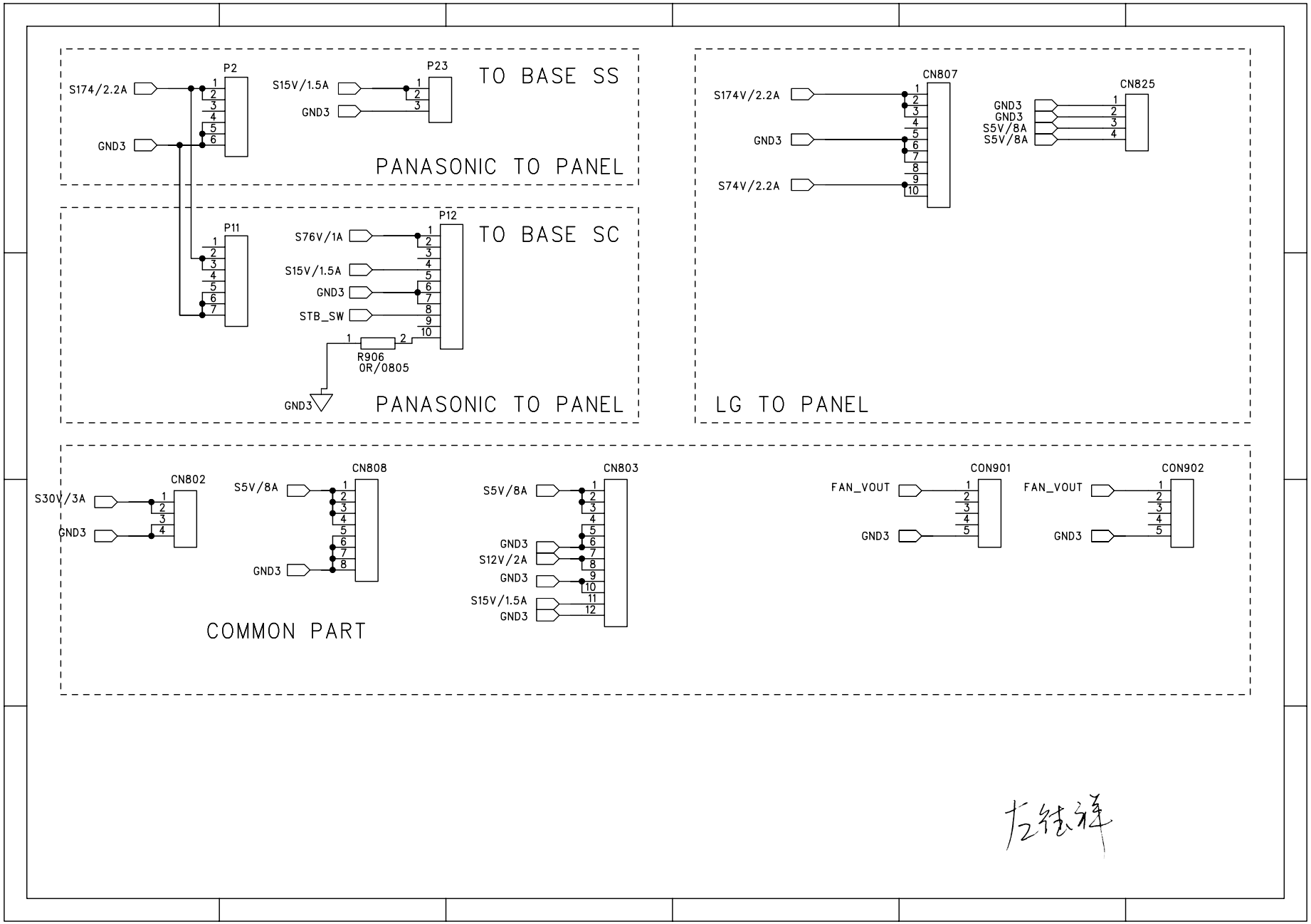
TO BASE SS
P2
S174/2.2A
GND3
P23
S15V/1.5A
GND3
PANASONIC TO PANEL
TO BASE SC
P11
P12
S76V/1A
S15V/1.5A
GND3
STB_SW
R906
0R/0805
GND3
PANASONIC TO PANEL
CN807
S174V/2.2A
GND3
S74V/2.2A
CN825
GND3
GND3
S5V/8A
S5V/8A
LG TO PANEL
CN802
S30V/3A
GND3
CN808
S5V/8A
GND3
CN803
S5V/8A
GND3
S12V/2A
GND3
S15V/1.5A
GND3
COMMON PART
CON901
FAN_VOUT
GND3
CON902
FAN_VOUT
GND3

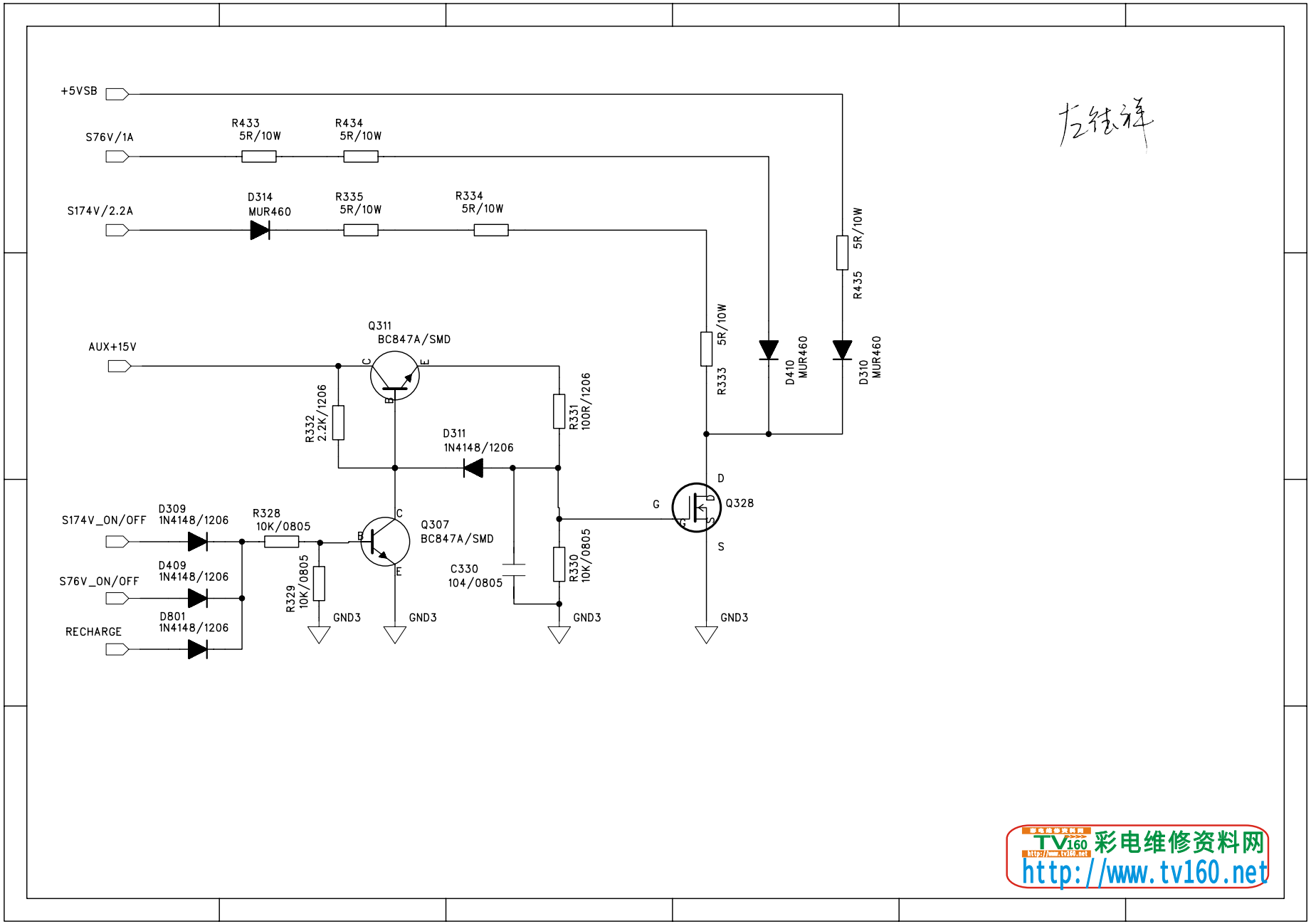

左结祥

TV160 彩电维修资料网
http://www.tv160.net