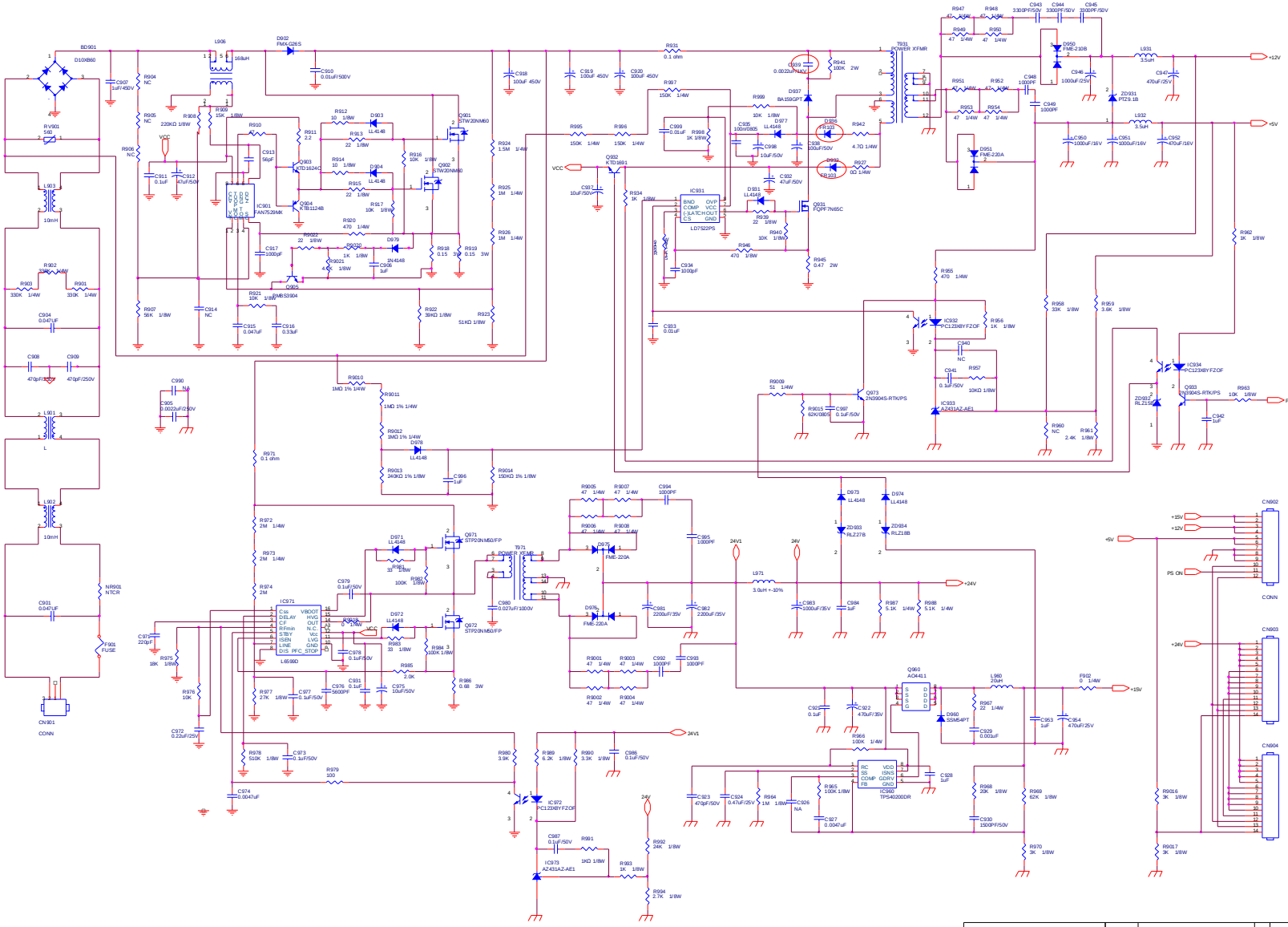

T P V (Top Victory Electronics Co., Ltd.)		OEM MODEL	GBMH	Size	Custom
品質孟 審查	T2S12-1-X-X3-070417	TPV MODEL	E377CZNKQWAEN	Rev	2
Key Component	02.POWER	PCB NAME	715T2S12-2	母零	<母零>
Date	Tuesday, April 17, 2007	Sheet	2 of 2		

更多彩电维修资料请上 www.tv160.net 《彩电维修资料网》查询吧！