The POWER Schematic diagram of 23"

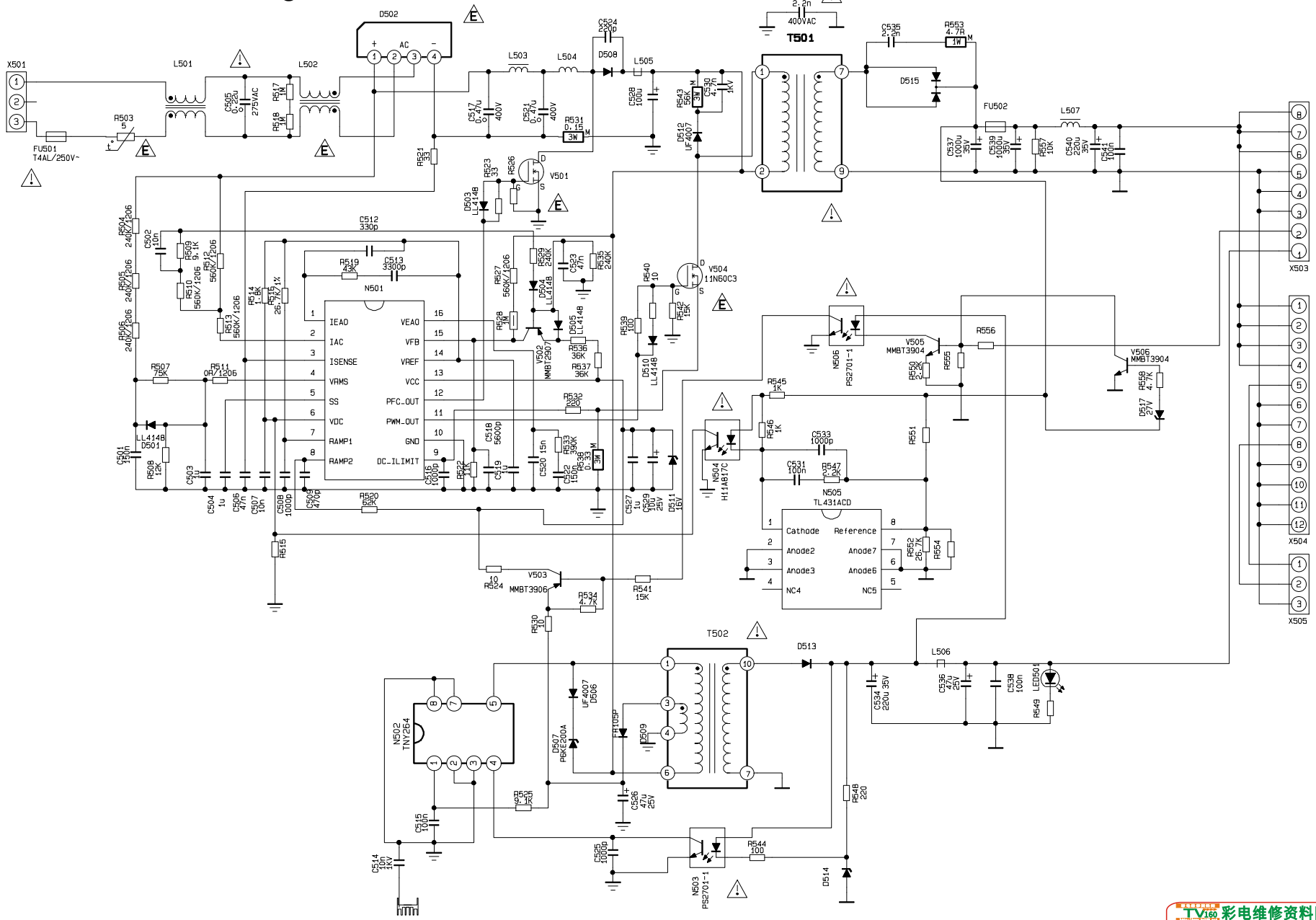

彩电维修资料网
http://www.tv160.net