21"-TSB-2IN1 Ref. Chassis
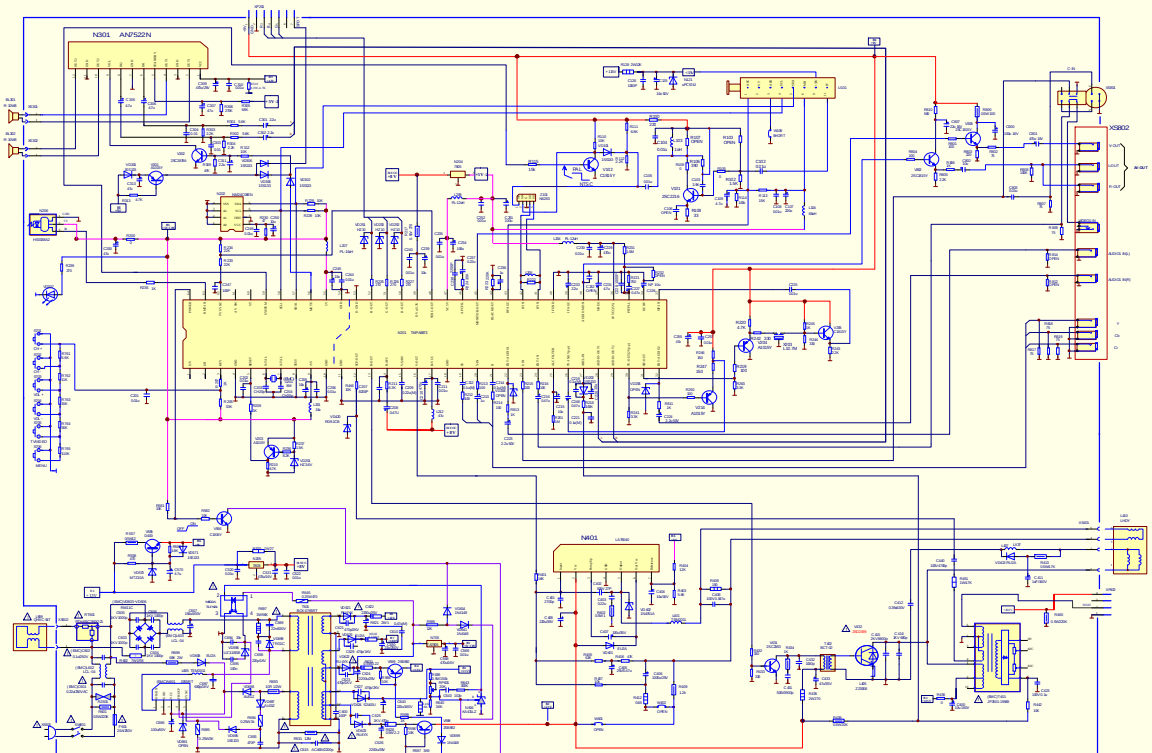
TV160 彩电维修资料网
http://www.tv160.net