TV160 彩电维修资料网
http://www.tv160.net

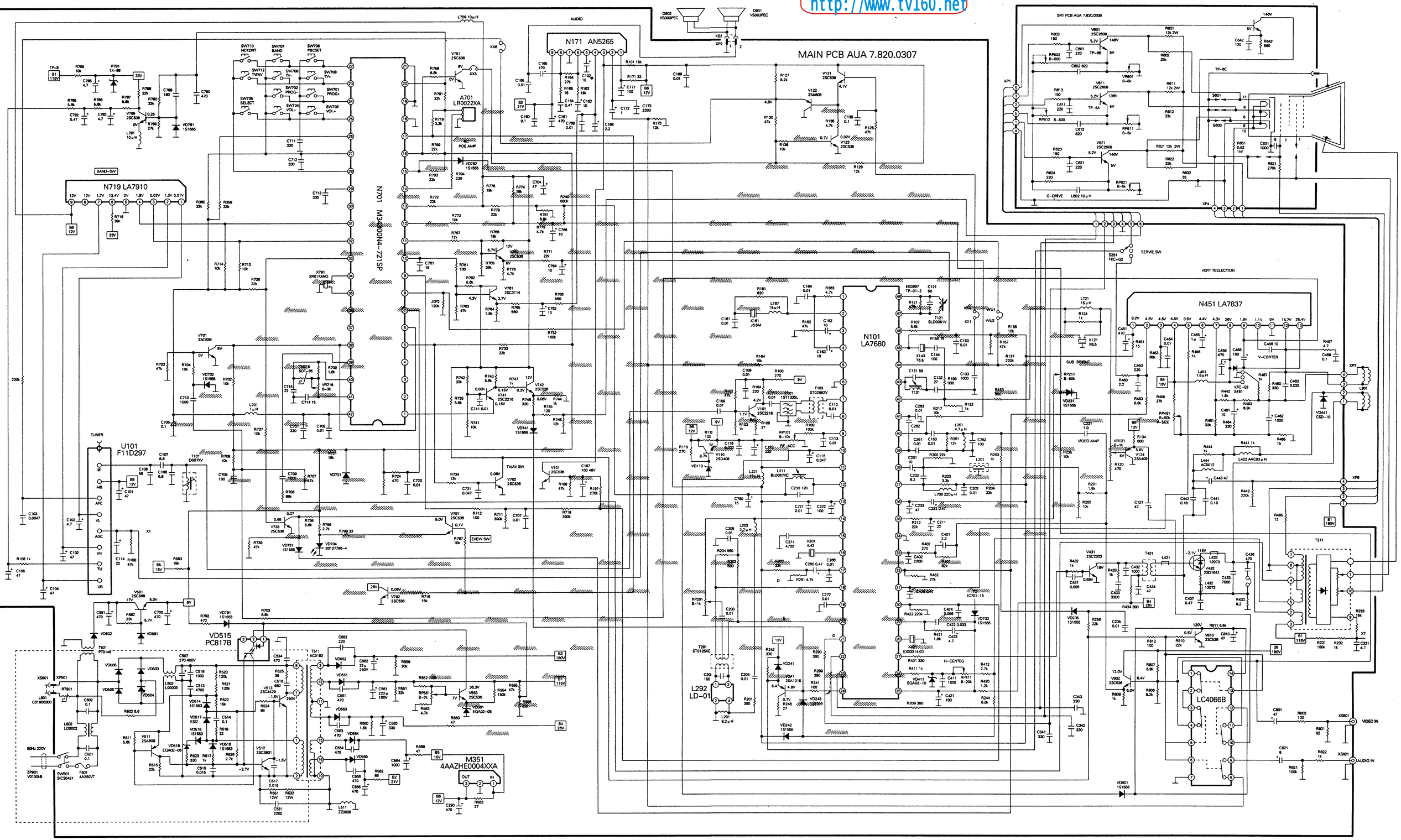
MAIN PCB AUA 7.820.0307
SRT PCB AUA 7.820.0309
N171 AN5265
N719 LA7910
N701 M38200N4-721SP
A701 LR0022XA
N101 LA7680
N451 LA7837
U101 F11D297
VD515 PC817B
M351 4AAZHE0004XXA
L292 LD-01
LC4066B
T271
T501 PT0146
T511 AC0192
T291 ST0125AC
T101 D0070V
T103 ST0296ZV
T431
T601 CO1906300
L601 LD0003
L602 LD0002
L503 LD0003
L511 ZD0008
L611 ZD0008
L801 CO1906300
L901 CO1906300
L421 AAC03μH
L422 AAC03μH
L444 AC0012
L451 1.8μH
L501 4.7μH
L502 LD0002
L503 LD0003
L601 CO1906300